Security Design

8

8.0 TABLE OF CONTENTS

8.1 Planning and Cost
245 Planning
245 Zones of Protection
246 Cost
247 Site Planning and Landscape Design
247 Vehicular Control
248 Perimeter Vehicle Inspection
248 Site Lighting
248 Site Signage
248 Landscaping

8.2 Architecture and Interior Design
249 Planning
250 Interior Construction
251 Additional Features

8.3 Commissioning

8.4 New Construction
253 Progressive Collapse
253 Exterior Walls
254 Exterior Windows

8.5 Existing Construction Modernization
259 Progressive Collapse

8.6 Historic Buildings

8.7 Structural Engineering
261 General Requirements
263 Good Engineering Practice Guidelines

8.8 Mechanical Engineering
265 Air System
265 Utility Protection

8.9 Electrical Engineering
265 Service and Distribution
266 Power and Lighting
266 Communications and Security Systems

8.10 Fire Protection Engineering
267 Security Enhancements
267 Smoke Removal Systems

8.11 Electronic Security
269 Control Centers and Building Management Systems
269 Security for Utility Closets, Mechanical Rooms, and Telephone Closets
269 Monitoring
269 Closed Circuit TV (CCTV)
269 Duress Alarms or Assistance Stations

8.12 Parking Security
271 Parking
271 Parking Inside the Building
271 Parking Facilities

8.13 Submission Requirements

Ariel Rios Federal Building Façade Completion
Washington, District of Columbia
Architect: Karn Charuhas Chapman & Twohey
GSA Project Managers: Norton Crichlow and Len Weiser

8.1 Planning and Cost

Planning

Designing and constructing safe and secure cost effective buildings has always been one of GSA's primary goals. To design and construct a safe and secure building, a collaborative approach to the design process is required, starting at the conceptual phase of the project and continuing throughout the process. It is necessary for all persons responsible for the safety and security of the building components to interact closely throughout the entire design and construction process. This means that all interested parties involved in issues pertaining to safety and security understand the issues and concerns of both parties. This also involves inviting the client, local building and fire officials, the appropriate designers and consultants to participate in such discussions. This process is particularly helpful in complex situations where many people represent different interests and a common goal needs to be achieved (i.e., a safe and secure building).

A multidisciplinary team will determine the appropriate design criteria for each project, based on a building-specific risk assessment and an analysis of all available information on security considerations, constraints, and tenant needs. However, a delicate balance must be achieved between safety and the security measures proposed. Therefore, the GSA fire protection engineer shall be a full participant on the subject multidisciplinary team to ensure that the safety of the building occupants exiting the building and the emergency responders entering the building are not impacted unknowingly by any proposed security measure.

In historic buildings, to minimize loss of character, design criteria should be based on facility-specific risk assessment and strategic programming. Strategic programming includes focusing security modifications on vulnerability points and locating less vulnerable activities in the historic buildings.

Zones of Protection

A zoned protection system is used, with intensifying areas of security beginning at the site perimeter and moving to the interior of the building.

Crime Prevention Through Environmental Design (CPTED). CPTED techniques should be used to help prevent and mitigate crime. Good strategic thinking on CPTED issues such as site planning, perimeter definition, sight lines, lighting, etc., can reduce the need for some engineering solutions.

For further information on CPTED, see:

- Publications by the National Institute of Law Enforcement and Criminal Justice (NILECJ).
- Crowe, Timothy D., *Crime Prevention Through Environmental Design*. National Crime Prevention Institute (1991).

Capability to Increase or Decrease Security. Designs should include the ability to increase security in response to a heightened threat, as well as to reduce security if changes in risk warrant it.

Multidisciplinary Approach. Improving security is the business of everyone involved with Federal facilities including designers, builders, operations and protection personnel, employees, clients, and visitors. Professionals who can contribute to implementing the criteria in this document include architects and structural, mechanical, fire protection, security, cost, and electrical engineers. Blast engineers and glazing specialists may also be required as well as building operations personnel and security professionals experienced in physical security design, operations, and risk assessment.

Each building system and element should support risk mitigation and reduce casualties, property damage, and the loss of critical functions. Security should be considered in all decisions, from selecting architectural materials to placing trash receptacles to designing redundant electrical systems.

Site Security Requirements. Site security requirements, including perimeter buffer zones, should be developed before a site is acquired and the construction funding request is finalized. This requirement may be used to prevent the purchase of a site that lacks necessary features, especially sufficient setback, and to help reduce the need for more costly countermeasures such as blast hardening.

Adjacent Sites. When warranted by a risk assessment, consideration should be given to acquiring adjacent sites or negotiating for control of rights-of-way. Adjacent sites can affect the security of Federal facilities.

Access Control and Electronic Security. Electronic security, including surveillance, intrusion detection, and screening, is a key element of facility protection; many aspects of electronic security and the posting of security personnel are adequately dealt with in other criteria and guideline documents. These criteria primarily address access control planning - including aspects of stair and lobby design - because access control must be considered when design concepts for a building are first conceived. While fewer options are available for modernization projects, some designs can be altered to consider future access control objectives.

Cost

Initial Costs. When cost is not considered, one risk can consume a disproportionate amount of the budget while other risks may go unmitigated or not addressed at all. Budgets should match the requirements of the risk assessment. It is important that decision-makers know funding needs early so that they can request funding to fully implement the requirements of the risk assessment. Should projects be over budget, security, along with other building elements, may be reevaluated. However, if security is decreased, there should be compensating operational procedures and/or periodic reevaluation to see if technology or procedures can mitigate the risk.

The security budget should be an output of a project-specific risk assessment. After the initial risk assessment has been conducted, a plan should outline security requirements for specific building systems. To facilitate funding, cost control, and risk management, agencies should consider a work breakdown structure which summarizes security expenditures in a specific account that can be clearly identified and monitored throughout design phases. This can facilitate the allocation of those funds to countermeasures for project-specific risks. For example, funding crime prevention may be more important than funding terrorist prevention countermeasures for some projects.

Cost-Risk Analysis. Actual costs may be more or less than budgeted. This cost risk results from the need to predict bidding market costs years in advance, evolving technology, changing risks, different countermeasures, and varying project conditions. The "Standard Practice for Measuring Cost Risk of Buildings and Building Systems," ASTM E 1946, may be used to manage cost risk.

Economic Analysis. A guide for selecting economic methods to evaluate investments in buildings and building systems can be found in ASTM E 1185. Two such economic practices are ASTM E 917 to measure life-cycle costs, and ASTM E 1074 to measure net economic benefits. ASTM E 1765 provides a way to evaluate both qualitative and quantitative aspects of security in a single model.

Security's life-cycle cost objective should be to minimize the total cost of building ownership while simultaneously

improving a building's efficiency. Total costs include all costs incurred by the owner and users of a building. While great emphasis is often placed on meeting initial budget, scope, and schedule, these are only a small fraction of a building's total life-cycle costs. Operations is a critical area where improved effectiveness and productivity can have the greatest impact upon cost, performance, and mission accomplishments. Serious consideration of life-cycle costs during the initial project stages can greatly reduce total life-cycle costs.

Site Planning and Landscape Design

IMPORTANT NOTE: The following criteria do NOT apply to all projects. Follow each criterion only if instructed to by your project-specific risk assessment. Many criteria are based on the recommendations of a specific building risk assessment/threat analysis. Where the criteria include a blank or offer a choice of approaches, the recommendations from risk assessment will provide information for filling in the blank or suggesting a choice of approaches.

Effective site planning and landscape design can enhance the security of a facility and eliminate the need for some engineering solutions. Security considerations should be an integral part of all site planning, perimeter definition, lighting, and landscape decisions.

Vehicular Control

Distance. The preferred distance from a building to unscreened vehicles or parking is _____(project-specific information to be provided). Ways to achieve this distance include creating a buffer zone using design features such as street furniture and bollards that can function as barriers; restricting vehicle access (see sections on *Perimeter Protection Zone and Landscaping* below, and Chapter 9). See Chapter 2: *Site Circulation Design*, for fire department/fire apparatus access requirements for which design must also be in compliance.

Thomas Eagleton Courthouse, St. Louis, MO

Perimeter Protection Zone. Site perimeter barriers are one element of the perimeter protection zone. Perimeter barriers capable of stopping vehicles of _____ lbs., up to a speed of _____, shall be installed (project-specific information to be provided). A vehicle velocity shall be used considering the angle of incidence in conjunction with the distance between the perimeter and the point at which a vehicle would likely be able to start a run at the perimeter. A barrier shall be selected that will stop the threat vehicle. Army TM 5-853-1 and TM 5-853-2/AFMAN 32-1071, Volume 2 contain design procedures. See Chapter 2: *Site Circulation Design,* for fire department/fire apparatus access requirements for which design must also be in compliance. In designing the barrier system, consider the following options:

- Using various types and designs of buffers and barriers such as walls, fences, trenches, ponds and water basins, plantings, trees, static barriers, sculpture, and street furniture;
- Designing site circulation to prevent high speed approaches by vehicles; and
- Offsetting vehicle entrances as necessary from the direction of a vehicle's approach to force a reduction in speed.

Perimeter Vehicle Inspection

- Provide space for inspection at a location to be specified.
- Provide design features for the vehicular inspection point that stop vehicles, prevent them from leaving the vehicular inspection area, and prevent tailgating.

Site Lighting

Effective site lighting levels: At vehicular and pedestrian entrances, ____ (project-specific information to be provided) horizontal maintained foot candles; and for perimeter and vehicular and pedestrian circulation areas, ____ horizontal maintained foot candles. In most circumstances, perimeter lighting should be continuous and on both sides of the perimeter barriers, with minimal hot and cold spots and sufficient to support CCTV and other surveillance. However, for safety reasons and/or for issues related to camera technology, lower levels may be desirable. Other codes or standards may restrict site lighting levels.

Site Signage

Confusion over site circulation, parking, and entrance locations can contribute to a loss of site security. Signs should be provided off site and at entrances; there should be on-site directional, parking, and cautionary signs for visitors, employees, service vehicles, and pedestrians. Unless required by other standards, signs should generally not be provided that identify sensitive areas.

Landscaping

Landscaping design elements that are attractive and welcoming can enhance security. For example, plants can deter unwanted entry; ponds and fountains can block vehicle access; and site grading can also limit access. Avoid landscaping that permits concealment of criminals or obstructs the view of security personnel and CCTV, in accordance with accepted CPTED principles.

Oakland Federal Building

8.2 Architecture and Interior Design

IMPORTANT NOTE: The following criteria do NOT apply to all projects. Follow each criterion only if instructed to by your project-specific risk assessment. Many criteria are based on the recommendations of a specific building risk assessment/threat analysis. Where the criteria include a blank or offer a choice of approaches, the recommendations from risk assessment will provide information for filling in the blank or suggesting a choice of approaches.

Planning

Office Locations. Offices of vulnerable officials should be placed or glazed so that the occupant cannot be seen from an uncontrolled public area such as a street. Whenever possible, these offices should face courtyards, internal sites, or controlled areas. If this is not possible, suitable obscuring glazing or window treatment shall be provided, including ballistic resistant glass (see section on New Construction, Exterior Windows, Additional Glazing Requirements), blast curtains, or other interior protection systems.

Mixed Occupancies. When possible, high-risk tenants should not be housed with low-risk tenants. If they are housed together, publicly accessible areas should be separated from high-risk tenants.

Public Toilets and Service Areas. Public toilets, service spaces, or access to vertical circulation systems should not be located in any non-secure areas, including the queuing area before screening at the public entrance.

Loading Docks and Shipping and Receiving Areas. Loading docks and receiving and shipping areas should be separated by at least 50 feet in any direction from utility rooms, utility mains, and service entrances including electrical, telephone/data, fire detection/alarm systems, fire suppression water mains, cooling and heating mains, etc. Loading docks should be located so that vehicles will not be driven into or parked under the building. If this is not possible, the service shall be hardened for blast.

Retail in the Lobby. Retail and other mixed uses, which are encouraged by the Public Buildings Cooperative Use Act of 1976, create public buildings that are open and inviting. While important to the public nature of the buildings, the presence of retail and other mixed uses may present a risk to the building and its occupants and should be carefully considered on a project specific basis during the risk assessment process. Retail and mixed uses may be accommodated through such means as separating entryways, controlling access, and hardening shared partitions, as well as through special security operational countermeasures.

Stairwells. Stairwells required for emergency egress should be located as remotely as possible from areas where blast events might occur. Wherever possible, stairs should not discharge into lobbies, parking, or loading areas.

Mailroom. The mailroom should be located away from facility main entrances, areas containing critical services, utilities, distribution systems, and important assets. In addition, the mailroom should be located at the perimeter of the building with an outside wall or window designed for pressure relief. It should have adequate space for explosive disposal containers. An area near the loading dock may be a preferred mailroom location.

Interior Construction

Lobby Doors and Partitions. Doors and walls along the line of security screening should meet requirements of UL752 Level___(project-specific information to be provided).

Critical Building Components. The following critical building components should be located no closer than ___ feet in any direction to any main entrance, vehicle circulation, parking, or maintenance area (project-specific information to be provided). If this is not possible, harden as appropriate:

- Emergency generator including fuel systems, day tank, fire sprinkler, and water supply;
- Normal fuel storage;
- Main switchgear;
- Telephone distribution and main switchgear;
- Fire pumps;
- Building control centers;
- UPS systems controlling critical functions;
- Main refrigeration systems if critical to building operation;
- Elevator machinery and controls;
- Shafts for stairs, elevators, and utilities;
- Critical distribution feeders for emergency power.

Exterior Entrances. The entrance design must balance aesthetic, security, risk, and operational considerations. One strategy is to consider co-locating public and employee entrances. Entrances should be designed to avoid significant queuing. If queuing will occur within the building footprint, the area should be enclosed in blast-resistant construction. If queuing is expected outside the building, a rain cover should be provided. Historic buildings generally require alternative design schemes that will not alter the exterior or lobby configuration. Consult the Regional Historic Preservation Officer regarding appropriate solutions.

Forced Entry. See section on *Exterior Walls* for swinging door, horizontal sliding door, and wall criteria. See section on *Structural Engineering, New Construction, Exterior Windows* for window criteria.

Equipment Space. Public and employee entrances should include space for possible future installation of access control and screening equipment. In historic buildings place security equipment in ancillary spaces where possible.

Entrance Co-location. Combine public and employee entrances.

Garage and Vehicle Service Entrances. All garage or service area entrances for government controlled or employee permitted vehicles that are not otherwise protected by site perimeter barriers shall be protected by devices capable of arresting a vehicle of the designated threat size at the designated speed. This criterion may be lowered if the access circumstances prohibit a vehicle from reaching this speed (see section on *Site Planning and Landscape Design, Vehicular Control, Perimeter Protection Zone*).

Additional Features

Areas of Potential Concealment. To reduce the potential for concealment of devices before screening points, avoid installing features such as trash receptacles and mail boxes that can be used to hide devices. If mail or express boxes are used, the size of the openings should be restricted to prohibit insertion of packages.

Roof Access. Design locking systems to meet the requirements of the International Building Code and limit roof access to authorized personnel.

Warren B. Rudman Courthouse, Concord, NH

Sam Gibbons U.S. Courthouse, Tampa, FL

8.3 Commissioning

The design team's security consultant/engineer shall identify and coordinate commissioning practices with the Construction Manager, Project Manager, and (if contracted separately) the Commissioning Authority, for the project's programmed performance goals. As appropriate, coordinate with other disciplines to fully enable required testing and certifications. Incorporate into construction specifications those testing and certification requirements that involve construction contractors. Examples of possible programmed performance goals, include:

- Glazing/Framing Blast Resistance.
- HVAC Emergency Modes of Operation (for Chemical-Biological Attack).
- Effectiveness of Entrance Card-Key System(s).
- Speech Privacy.
- Effectiveness of Electronic Security.
- Functionality of Assistance/Alarm Systems.
- Effectiveness of Building Automation System Interface.
- Functionality of Applied Innovative Technologies.

8.4 New Construction

Progressive Collapse. Designs that facilitate or are vulnerable to progressive collapse must be avoided. At a minimum, all new facilities shall be designed for the loss of a column for one floor above grade at the building perimeter without progressive collapse. This design and analysis requirement for progressive collapse is not part of a blast analysis. It is intended to ensure adequate redundant load paths in the structure should damage occur for whatever reason. Designers may apply static and/or dynamic methods of analysis to meet this requirement. Ultimate load capacities may be assumed in the analyses.

In recognition that a larger than design explosive (or other) event may cause a partial collapse of the structure, new facilities with a defined threat shall be designed with a reasonable probability that, if local damage occurs, the structure will not collapse or be damaged to an extent disproportionate to the original cause of the damage.

In the event of an internal explosion in an uncontrolled public ground floor area, the design shall prevent progressive collapse due to the loss of one primary column, or the designer shall show that the proposed design precludes such a loss. That is, if columns are sized, reinforced, or protected so that the threat charge will not cause the column to be critically damaged, then progressive collapse calculations are not required for the internal event. For design purposes, assume there is no additional standoff from the column beyond what is permitted by the design.

Discussion: As an example, if an explosive event causes the local failure of one column and major collapse within one structural bay, a design mitigating progressive collapse would preclude the additional loss of primary structural members beyond this localized damage zone (i.e., the loss of additional columns, main girders, etc.). This does not preclude the additional loss of secondary structural or non-structural elements outside the initial zone of localized damage, provided the loss of such members is acceptable for that performance level and the loss does not precipitate the onset of progressive collapse.

Building Materials. All building materials and types acceptable under the model International Building Code are allowed. However, special consideration should be given to materials which have inherent ductility and which are better able to respond to load reversals (i.e., cast in place reinforced concrete and steel construction). Careful detailing is required for material such as pre-stressed concrete, pre-cast concrete, and masonry to adequately respond to the design loads. The construction type selected must meet all performance criteria of the specified Level of Protection.

Exterior Walls

Design for limited load:

- Design exterior walls for the actual pressures and impulses up to a maximum of ___ psi and ___ psi-msec (project-specific information to be provided).
- The designer should also ensure that the walls are capable of withstanding the dynamic reactions from the windows.
- Shear walls that are essential to the lateral and vertical load bearing system, and that also function as exterior walls, shall be considered primary structures. Design exterior shear walls to resist the actual blast loads predicted from the threats specified.
- Where exterior walls are not designed for the full design loads, special consideration shall be given to construction types that reduce the potential for injury (see *Building Materials* in this section).

Design for full load:

- Design the exterior walls to resist the actual pressures and impulses acting on the exterior wall surfaces from the threats defined for the facility (see also discussions in Design for limited load above).

Forced Entry:

- Security of Swinging Door Assemblies ASTM F 476 Grade ____ (project-specific information to be provided).
- Measurement of Forced Entry Resistance of Horizontal Sliding Door Assemblies ASTM F 842 Grade ___ (project-specific information to be provided).
- A medium protection level (per TM 5-853) for walls would be the equivalent of 4" concrete with #5 reinforcing steel at 6" interval each way or 8" CMU with #4 reinforcing steel at 8 in. interval. TM 5-853 provides other alternatives for low, medium, and high protection.

Exterior Windows

The multidisciplinary team shall evaluate the performance requirements for all security-glazing materials proposed for the project. The multidisciplinary team shall ensure that normal tools carried by firefighters, such as a pick head axe, halligan tool, or similar device, can readily overcome the subject glazing barriers. If the use of more specialized tools, such as a rabbit tool, a k-tool, circular saws, rams, or similar devices is necessary to break through the glazing barrier or if the glazing itself is hardened that a blast may not blow out the windows, alternative methods or systems must be designed to ensure smoke from the incident is not trapped inside the building. (See section on *New Construction, Fire Protection Engineering, Smoke Removal Systems)*.

The following terms are to be applied and identified for each project-specific risk assessment:

No restriction. No restrictions on the type of glazing.

Limited protection. These windows do not require design for specific blast pressure loads. Rather, the designer is encouraged to use glazing materials and designs that minimize the potential risks.

- Preferred systems include: thermally tempered heat strengthened or annealed glass with a security film installed on the interior surface and attached to the frame; laminated thermally tempered, laminated heat strengthened, or laminated annealed glass; and blast curtains.
- Acceptable systems include thermally tempered glass; and thermally tempered, heat strengthened or annealed glass with film installed on the interior surface (edge to edge, wet glazed, or daylight installations are acceptable).
- Unacceptable systems include untreated monolithic annealed or heat strengthened glass; and wire glass.

The minimum thickness of film that should be considered is 4 mil. In a blast environment, glazing can induce loads three or more times that of conventional loads onto the frames. This must be considered with the application of anti-shatter security film.

The designer should design the window frames so that they do not fail prior to the glazing under lateral load. Likewise, the anchorage should be stronger than the window frame, and the supporting wall should be stronger than the anchorage.

Table 8-1
Glazing Protection Levels Based on Fragment Impact Locations

Performance Condition	Protection Level	Hazard Level	Description of Window Glazing Response
1	Safe	None	Glazing does not break. No visible damage to glazing or frame.
2	Very High	None	Glazing cracks but is retained by the frame. Dusting or very small fragments near sill or on floor acceptable.
3a	High	Very Low	Glazing cracks. Fragments enter space and land on floor no further than 3.3 ft. from the window.
3b	High	Low	Glazing cracks. Fragments enter space and land on floor no further than 10 ft. from the window.
4	Medium	Medium	Glazing cracks. Fragments enter space and land on floor and impact a vertical witness panel at a distance of no more than 10 ft. from the window at a height no greater than 2 ft. above the floor.
5	Low	High	Glazing cracks and window system fails catastrophically. Fragments enter space impacting a vertical witness panel at a distance of no more than 10 ft. from the window at a height greater than 2 ft. above the floor.

* In conditions 2, 3a, 3b, 4 and 5, glazing fragments may be thrown to the outside of the protected space toward the detonation location.

The design strength of a window frame and associated anchorage is related to the breaking strength of the glazing. Thermally tempered glass is roughly four times as strong as annealed, and heat strengthened glass is roughly twice as strong as annealed.

Design up to specified load. Window systems design (glazing, frames, anchorage to supporting walls, etc.) on the exterior facade should be balanced to mitigate the hazardous effects of flying glazing following an explosive event. The walls, anchorage, and window framing should fully develop the capacity of the glazing material selected.

The designer may use a combination of methods such as government produced and sponsored computer programs (e.g., WINLAC, GLASTOP, SAFEVU, and BLASTOP/WINGUARD) coupled with test data and

recognized dynamic structural analysis techniques to show that the glazing either survives the specified threats or the post damage performance of the glazing protects the occupants in accordance with the conditions specified here (Table 8-1). When using such methods, the designer may consider a breakage probability no higher than 750 breaks per 1000 when calculating loads to frames and anchorage.

Table 8-2
Test Structure

Side view of test structure illustrating performance conditions of Table 8-1

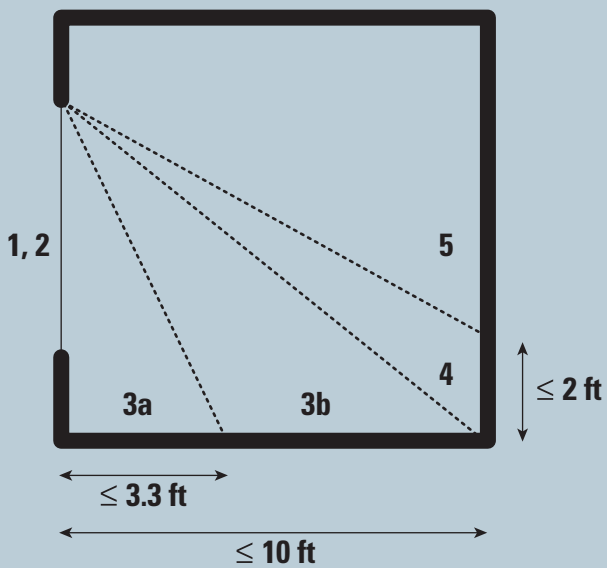

Test window should be in the design position or centered on the wall.

While most test data use glazing framed with a deep bite, this may not be amenable to effective glazing performance or installation. It has been demonstrated that new glazing systems with a 3/4-inch minimum bite can be engineered to meet the performance standards of Table 8-2 with the application of structural silicone. However, not much information is available on the long-term performance of glazing attached by structural silicone or with anchored security films.

All glazing hazard reduction products for these protection levels require product-specific test results and engineering analyses performed by qualified independent agents demonstrating the performance of the product under the specified blast loads, and stating that it meets or exceeds the minimum performance required. Performance levels are based on the protection conditions presented in Table 8-2. A Government-provided database indicating the performance of a wide variety of products will be made available to the designer.

- **Window Fenestration:** The total fenestration openings are not limited; however, a maximum of 40 percent per structural bay is a preferred design goal.
- **Window Frames:** The frame system should develop the full capacity of the chosen glazing up to 750 breaks per 1000, and provide the required level of protection without failure. This can be shown through design calculations or approved testing methods.
- **Anchorage:** The anchorage should remain attached to the walls of the facility during an explosive event without failure. Capacity of the anchorage system can be shown through design calculations or approved tests that demonstrate that failure of the proposed anchorage will not occur and that the required performance level is provided.

Glazing alternatives. Glazing alternatives are as follows:

- **Preferred systems include:** thermally tempered glass with a security film installed on the interior surface and attached to the frame; laminated thermally tempered, laminated heat strengthened, or laminated annealed glass; and blast curtains.
- Acceptable systems include monolithic thermally tempered glass with or without film if the pane is designed to withstand the full design threat (see Condition 1 on Table 8-2).
- Unacceptable systems include untreated monolithic annealed or heat-strengthened glass; and wire glass.

In general, thicker anti-shatter security films provide higher levels of hazard mitigation than thinner films. Testing has shown that a minimum of a 7 mil thick film, or specially manufactured 4 mil thick film, is the minimum to provide hazard mitigation from blast. The minimum film thickness that should be considered is 4 mil.

Not all windows in a public facility can reasonably be designed to resist the full forces expected from the design blast threats. As a minimum, design window systems (glazing, frames, and anchorage) to achieve the specified performance conditions (Table 8-2) for the actual blast pressure and impulse acting on the windows up to a maximum of ___ psi and ___ psi-msec. As a minimum goal, the window systems should be designed so that at least __ percent of the total glazed areas of the facility meet the specified performance conditions when subjected to the defined threats (project-specific information to be provided).

In some cases, it may be beneficial and economically feasible to select a glazing system that demonstrates a higher, safer performance condition. Where tests indicate that one design will perform better at significantly higher loads, that design could be given greater preference.

Robert C. Byrd Courthouse, Charleston, WV

Where peak pressures from the design explosive threats can be shown to be below 1 psi acting on the face of the building, the designer may use the reduced requirements of Exterior Walls, Limited Protection, in this section.

Additional Glazing Requirements:

- Ballistic windows, if required, shall meet the requirements of UL 752 Bullet-Resistant Glazing Level ___ (project-specific information to be provided). Glass-clad polycarbonate or laminated polycarbonate are two types of acceptable glazing material.
- Security glazing, if required, shall meet the requirements of ASTM F1233 or UL 972, Burglary Resistant Glazing Material.

This glazing should meet the minimum performance specified in Table 8-2. However, special consideration should be given to frames and anchorages for ballistic-resistant windows and security glazing since their inherent resistance to blast may impart large reaction loads to the supporting walls.

- Resistance of Window Assemblies to Forced Entry (excluding glazing) ASTM F 588 Grade___ (project-specific information to be provided; see above for glazing).
- Design for eavesdropping and electronic emanations is beyond the scope of the criteria.

Non-Window Openings. Non-window openings such as mechanical vents and exposed plenums should be designed to the level of protection required for the exterior wall. Designs should account for potential in-filling of blast over-pressures through such openings. The design of structural members and all mechanical system mountings and attachments should resist these interior fill pressures.

Interior Windows. Interior glazing should be minimized where a threat exists. The designer should avoid locating critical functions next to high risk areas with glazing, such as lobbies, loading docks, etc.

Parking. The following criteria apply to parking inside a facility where the building superstructure is supported by the parking structure:

- The designer shall protect primary vertical load carrying members by implementing architectural or structural features that provide a minimum 6-inch standoff.
- All columns in the garage area shall be designed for an unbraced length equal to two floors, or three floors where there are two levels of parking.

Selected Design Areas. For lobbies and other areas with specified threats:

- The designer shall implement architectural or structural features that deny contact with exposed primary vertical load members in these areas. A minimum standoff of at least 6 inches from these members is required.
- Primary vertical load carrying members shall be designed to resist the effects of the specified threat (see *Progressive Collapse* in this section).

Loading Docks. The loading dock design should limit damage to adjacent areas and vent explosive force to the exterior of the building. Significant structural damage to the walls and ceiling of the loading dock is acceptable. However, the areas adjacent to the loading dock should not experience severe structural damage or collapse. The floor of the loading dock does not need to be designed for blast resistance if the area below is not occupied and contains no critical utilities.

Mailrooms and Unscreened Retail Spaces. Mailrooms where packages are received and opened for inspection, and unscreened retail spaces (see *Architecture and Interior Design, Planning, Retail in the Lobby and Mailroom*) shall be designed to mitigate the effects of a blast on primary vertical or lateral bracing members. Where these rooms are located in occupied areas or adjacent to critical utilities, walls, ceilings, and floors, they should be blast and fragment resistant. Significant structural damage to the walls, ceilings, and floors of the mailroom is acceptable. However, the areas adjacent to the mailroom should not experience severe damage or collapse.

Venting. The designer should consider methods to facilitate the venting of explosive forces and gases from the interior spaces to the outside of the structure. Examples of such methods include the use of blow-out panels and window system designs that provide protection from blast pressure applied to the outside but that readily fail and vent if exposed to blast pressure on the inside.

8.5 Existing Construction Modernization

Existing structures undergoing a modernization should be upgraded to new construction requirements when required by the risk assessment except where noted in Progressive Collapse, below. The requirements of new construction apply to all major additions and structural modifications.

Protection Levels. Risk assessments based on the new construction criteria shall be performed on existing structures to examine the feasibility of upgrading the facility. The results, including at a minimum recommendations and cost, shall be documented in a written report before submission for project funding.

Progressive Collapse. Progressive Collapse analysis must be performed if:

1. The building is to be upgraded for seismic forces
2. The building structural frame will be exposed as part of the current scope of work making any structural upgrade for preventing progressive collapse appropriate at this time.
3. The exterior façade of the building is to be removed making structural upgrade of the perimeter structural system appropriate at this time.

Prior to the submission for funding, all structures shall be analyzed according to requirements for new construction, and a written report shall clearly state the potential vulnerability of the building to progressive collapse. This report will be used as a planning tool to reduce risk. Findings of the design-analysis shall be incorporated into the project's risk assessment and include the methodology, the details of the progressive collapse analysis, retrofit recommendations, cost estimates, and supporting calculations.

8.6 Historic Buildings

Historic buildings are covered by these criteria in the same manner as other existing buildings (see *Existing Construction Modernization* in this section).

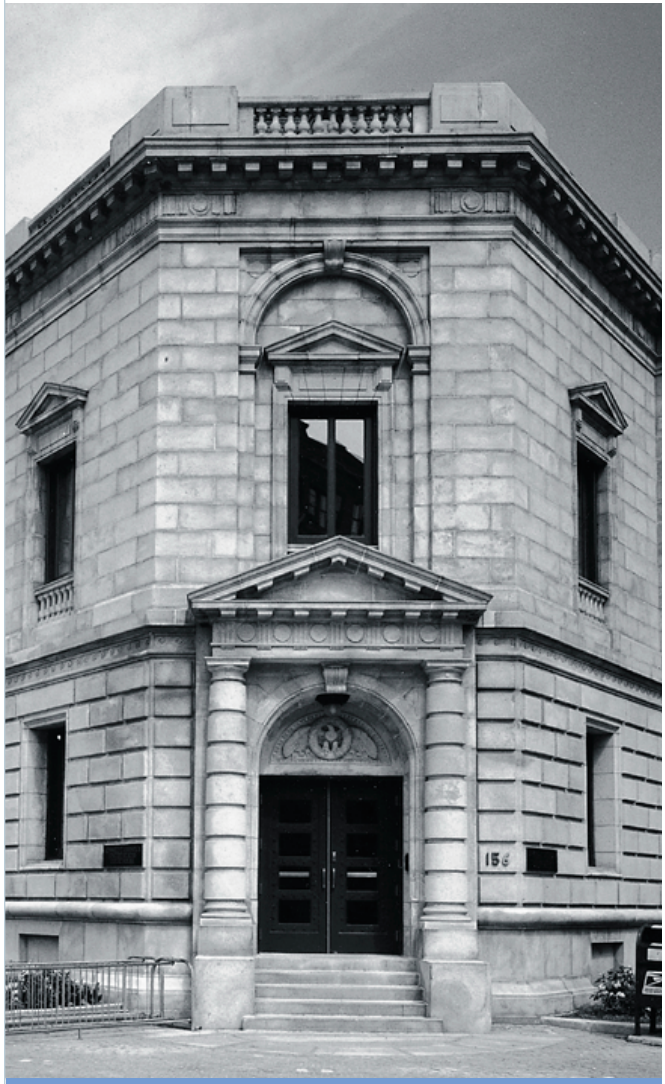

Edward T. Gignoux U.S. Courthouse, Portland, ME

8.7 Structural Engineering

IMPORTANT NOTE: The following criteria do NOT apply to all projects. Follow each criterion only if instructed to by your project-specific risk assessment. Many criteria are based on the recommendations of a specific building risk assessment/threat analysis. Where the criteria include a blank or offer a choice of approaches, the recommendations from risk assessment will provide information for filling in the blank or suggesting a choice of approaches.

The intent of these criteria is to reduce the potential for widespread catastrophic structural damage and the resulting injury to people. The designer should exercise good judgment when applying these criteria to ensure the integrity of the structure, and to obtain the greatest level of protection practical given the project constraints. There is no guarantee that specific structures designed in accordance with this document will achieve the desired performance. However, the application of the criteria will enhance structural performance if the design events occur.

There are three basic approaches to blast resistant design: blast loads can be reduced, primarily by increasing standoff; a facility can be strengthened; or higher levels of risk can be accepted. The best answer is often a blend of the three.

The field of protective design is the subject of intense research and testing. These criteria will be updated and revised as new information about material and structural response is made available.

Refer to Chapter 4: *Structural Engineering*, for additional related information.

General Requirements

Designer Qualifications. For buildings designed to meet Medium or Higher Protection Levels, a blast engineer must be included as a member of the design team. He/she should have formal training in structural dynamics, and demonstrated experience with accepted design practices for blast resistant design and with referenced technical manuals.

Design Narratives. A design narrative and copies of design calculations shall be submitted at each phase identifying the building-specific implementation of the criteria. Security requirements should be integrated into the overall building design starting with the planning phase.

Compliance. Full compliance with the risk assessment and this chapter is expected. Specific requirements should be in accordance with the findings of the facility risk assessment.

New Techniques. Alternative analysis and mitigation methods are permitted, provided that the performance level is attained. A peer group should evaluate new and untested methods.

Methods and References. All building components requiring blast resistance shall be designed using established methods and approaches for determining dynamic loads, structural detailing, and dynamic structural response. Design and analysis approaches should be consistent with those in the technical manuals (TMs) below.

The following are primary TMs (see *Good Engineering Practice Guidelines*, Item 18, in this section for additional references):

- Air Force Engineering and Services Center. *Protective Construction Design Manual*, ESL-TR-87-57. Prepared for Engineering and Services Laboratory, Tyndall Air Force Base, FL. (1989)
- U.S. Department of the Army. *Fundamentals of Protective Design for Conventional Weapons*, TM 5- 855-1. Washington, DC, Headquarters, U.S. Department of the Army. (1986)
- U.S. Department of the Army. *Security Engineering*, TM 5-853 and Air Force AFMAN 32-1071, Volumes 1, 2, 3, and 4. Washington, DC, Departments of the Army and Air Force. (1994)
- U.S. Department of the Army. *Structures to Resist the Effects of Accidental Explosions*, Army TM 5-1300, Navy NAVFAC P-397, AFR 88-2. Washington, DC, Departments of the Army, Navy and Air Force. (1990)
- U.S. Department of Energy. *A Manual for the Prediction of Blast and Fragment Loading on Structures*, DOE/TIC 11268. Washington, DC, Headquarters, U.S. Department of Energy. (1992)

Structural and Non-Structural Elements. To address blast, the priority for upgrades should be based on the relative importance of a structural or non-structural element, in the order defined below:

- **Primary Structural Elements -** the essential parts of the building's resistance to catastrophic blast loads and progressive collapse, including columns, girders, roof beams, and the main lateral resistance system;
- **Secondary Structural Elements -** all other load bearing members, such as floor beams, slabs, etc.;

- **Primary Non-Structural Elements -** elements (including their attachments) which are essential for life safety systems or elements which can cause substantial injury if failure occurs, including ceilings or heavy suspended mechanical units; and
- **Secondary Non-Structural Elements -** all elements not covered in primary non-structural elements, such as partitions, furniture, and light fixtures.

Priority should be given to the critical elements that are essential to mitigating the extent of collapse. Designs for secondary structural elements should minimize injury and damage. Consideration should also be given to reducing damage and injury from primary as well as secondary non-structural elements.

Loads and Stresses. Where required, structures shall be designed to resist blast loads. The demands on the structure will be equal to the combined effects of dead, live , and blast loads. Blast loads or dynamic rebound may occur in directions opposed to typical gravity loads.

For purposes of designing against progressive collapse, loads shall be defined as dead load plus a realistic estimate of actual live load. The value of the live load may be as low as 25 percent of the code-prescribed live load.

The design should use ultimate strengths with dynamic enhancements based on strain rates. Allowable responses are generally post elastic.

Protection Levels. The entire building structure or portions of the structure will be assigned a protection level according to the facility-specific risk assessment. Protection levels for ballistics and forced entry are described in *New Construction* in this section. The following are definitions of damage to the structure and exterior wall systems from the bomb threat for each protection level:

- **Low and Medium/Low Level Protection -** Major damage. The facility or protected space will sustain a high level of damage without progressive collapse. Casualties will occur and assets will be damaged. Building components, including structural members, will require replacement, or the building may be completely unrepairable, requiring demolition and replacement.
- **Medium Level Protection -** Moderate damage, repairable. The facility or protected space will sustain a significant degree of damage, but the structure should be reusable. Some casualties may occur and assets may be damaged. Building elements other than major structural members may require replacement.
- **Higher Level Protection -** Minor damage, repairable. The facility or protected space may globally sustain minor damage with some local significant damage possible. Occupants may incur some injury, and assets may receive minor damage.

Good Engineering Practice Guidelines

The following are rules of thumb commonly used to mitigate the effects of blast on structures. Details and more complete guidance are available in the Technical Manuals listed in the *New Techniques, Methods and References* section, and in the references below. The following guidelines are not meant to be complete, but are provided to assist the designer in the initial evaluation and selection of design approaches.

For higher levels of protection from blast, cast-in-place reinforced concrete is normally the construction type of choice. Other types of construction such as properly designed and detailed steel structures are also allowed. Several material and construction types, while not disallowed by these criteria, may be undesirable and uneconomical for protection from blast.

- To economically provide protection from blast, inelastic or post elastic design is standard. This allows the structure to absorb the energy of the explosion through plastic deformation while achieving the objective of saving lives. To design and analyze structures for blast loads, which are highly nonlinear both spatially and temporally, it is essential that proper dynamic analysis methods be used. Static analysis methods will generally result in unachievable or uneconomical designs.

- The designer should recognize that components might act in directions for which they are not designed. This is due to the engulfment of structural members by blast, the negative phase, the upward loading of elements, and dynamic rebound of members. Making steel reinforcement (positive and negative faces) symmetric in all floor slabs, roof slabs, walls, beams and girders will address this issue. Symmetric reinforcement also increases the ultimate load capacity of the members.

U.S. Census Bureau, Bowie, MD

- Lap splices should fully develop the capacity of the reinforcement.

- Lap splices and other discontinuities should be staggered.

- Ductile detailing should be used for connections, especially primary structural member connections.

- There should be control of deflections around certain members, such as windows, to prevent premature failure. Additional reinforcement is generally required.

- Balanced design of all building structural components is desired. For example, for window systems, the frame and anchorage shall be designed to resist the full capacity of the weakest element of the system.

- Special shear reinforcement including ties and stirrups is generally required to allow large post-elastic behavior. The designer should carefully balance the selection of small but heavily reinforced (i.e., congested) sections with larger sections with lower levels of reinforcement.

- Connections for steel construction should be ductile and develop as much moment connection as practical. Connections for cladding and exterior walls to steel frames shall develop the capacity of the wall system under blast loads.

- In general, single point failures that can cascade, producing wide spread catastrophic collapse, are to be avoided. A prime example is the use of transfer beams and girders that, if lost, may cause progressive collapse and are therefore highly discouraged.

- Redundancy and alternative load paths are generally good in mitigating blast loads. One method of accomplishing this is to use two-way reinforcement schemes where possible.

- In general, column spacing should be minimized so that reasonably sized members can be designed to resist the design loads and increase the redundancy of the system. A practical upper level for column spacing is generally 30 ft. for the levels of blast loads described herein.

- In general, floor to floor heights should be minimized. Unless there is an overriding architectural requirement, a practical limit is generally less than or equal to 16 ft.

- It is recommended that the designer use fully grouted and reinforced CMU construction in cases where CMU is selected.

- It is essential that the designer actively coordinate structural requirements for blast with other disciplines including architectural and mechanical.

- The use of one-way wall elements spanning from floor-to-floor is generally a preferred method to minimize blast loads imparted to columns.

- In many cases, the ductile detailing requirements for seismic design and the alternate load paths provided by progressive collapse design assist in the protection from blast. The designer must bear in mind, however, that the design approaches are at times in conflict. These conflicts must be worked out on a case by case basis.

The following additional references are recommended:

- Biggs, John M. *Introduction to Structural Dynamics*. McGraw-Hill. (1964).
- The Institute of Structural Engineers. *The Structural Engineer's Response to Explosive Damage*. SETO, Ltd., 11 Upper Belgrave Street, London SW1X8BH. (1995).
- Mays, G.S. and Smith, P.D. *Blast Effects on Buildings: Design of Buildings to Optimize Resistance to Blast Loading*. Thomas Telford Publications, 1 Heron Quay, London E14 4JD. (1995).
- National Research Council. *Protecting Buildings from Bomb Damage*. National Academy Press. (1995).

8.8 Mechanical Engineering

IMPORTANT NOTE: The following criteria do NOT apply to all projects. Follow each criterion only if instructed to by your project-specific risk assessment. Many criteria are based on the recommendations of a specific building risk assessment/threat analysis. Where the criteria include a blank or offer a choice of approaches, the recommendations from risk assessment will provide information for filling in the blank or suggesting a choice of approaches.

The mechanical system should continue the operation of key life safety components following an incident. The criteria focus on locating components in less vulnerable areas, limiting access to mechanical systems, and providing a reasonable amount of redundancy.

Air System

Air Intakes. On buildings of more than four stories, locate intakes on the fourth floor or higher. On buildings of three stories or less, locate intakes on the roof or as high as practical. Locating intakes high on a wall is preferred over a roof location.

Utility Protection

Utilities and Feeders. Utility systems should be located at least 50 feet from loading docks, front entrances, and parking areas.

Incoming Utilities. Within building and property lines, incoming utility systems should be concealed and given blast protection, including burial or proper encasement wherever possible (see section on Electrical Engineering, Service and Distribution, Utilities and Feeders).

8.9 Electrical Engineering

IMPORTANT NOTE: The following criteria do NOT apply to all projects. Follow each criterion only if instructed to by your project-specific risk assessment. Many criteria are based on the recommendations of a specific building risk assessment/threat analysis. Where the criteria include a blank or offer a choice of approaches, the recommendations from risk assessment will provide information for filling in the blank or suggesting a choice of approaches.

The major security functions of the electrical system are to maintain power to essential building services, especially those required for life safety and evacuation; provide lighting and surveillance to deter criminal activities; and provide emergency communication (see section on *Architecture and Interior Design, Interior Construction, Critical Building Components*, for location of critical building components).

Service and Distribution

Distributed Emergency Power. Emergency and normal electric panels, conduits, and switchgear should be installed separately, at different locations, and as far apart as possible. Electric distribution should also run at separate locations.

Normal Fuel Storage. The main fuel storage should be located away from loading docks, entrances, and parking. Access should be restricted and protected (e.g., locks on caps and seals).

Emergency Fuel Storage. The day tank should be mounted near the generator, given the same protection as the generator (see section on *Emergency Generator*,

below), and sized to store approximately _____ hours of fuel (project-specific information to be provided). A battery and/or UPS could serve a smaller building or leased facility.

Tertiary Power. Conduit and line can be installed outside to allow a trailer-mounted generator to connect to the building's electrical system. If tertiary power is required, other methods include generators and feeders from alternative substations.

Emergency Generator. The emergency generator should be located away from loading docks, entrances, and parking. More secure locations include the roof, protected grade level, and protected interior areas. The generator should not be located in any areas that are prone to flooding.

Philadelphia Veterans Center

Utilities and Feeders. Utility systems should be located away from loading docks, entrances, and parking. Underground service is preferred. Alternatively, they can be hardened.

Power and Lighting

Site Lighting. Site lighting should be coordinated with the CCTV system.

Restrooms. Emergency power should be provided for emergency lighting in restrooms.

Communications and Security Systems

Redundant Communications:

- The facility could have a second telephone service to maintain communications in case of an incident.
- A base radio communication system with antenna should be installed in the stairwell, and portable sets distributed on floors. This is the preferred alternative.

Radio Telemetry. Distributed antennas could be located throughout the facility if required for emergency communication through wireless transmission of data.

Alarm and Information Systems. Alarm and information systems should not be collected and mounted in a single conduit, or even co-located. Circuits to various parts of the building shall be installed in at least two directions and/or risers. Low voltage signal and control copper conductors should not share conduit with high voltage power conductors. Fiber-optic conductors are generally preferred over copper.

Empty Conduits. Empty conduits and power outlets can be provided for possible future installation of security control equipment.

8.10 Fire Protection Engineering

IMPORTANT NOTE: The following criteria do NOT apply to all projects. Follow each criterion only if instructed to by your project-specific risk assessment. Many criteria are based on the recommendations of a specific building risk assessment/threat analysis. Where the criteria include a blank or offer a choice of approaches, the recommendations from risk assessment will provide information for filling in the blank or suggesting a choice of approaches.

The fire protection system inside the building should maintain life safety protection after an incident and allow for safe evacuation of the building when appropriate.

While fire protection systems are designed to perform well during fires, they are not traditionally designed to survive bomb blast. The three components of the fire protection system are:

1. active features, including sprinklers, fire alarms, smoke control, etc.;
2. passive features, including fire resistant barriers; and
3. operational features, including system maintenance and employee training.

Please note that this chapter focuses only on active features. See Chapter 7: *Fire Protection Engineering*, for additional information.

Security Enhancements

Water Supply. The fire protection water system should be protected from single point failure in case of a blast event. The incoming line should be encased, buried, or located 50 ft. away from high threat areas. The interior mains should be looped and sectionalized where provided. The interior standpipes should be cross connected on each floor.

Dual Fire Pumps: Electric and Diesel. To increase the reliability of the fire protection system in strategic locations, a dual pump arrangement could be considered, with one electric pump and one diesel pump.

Egress Door Locks. All security locking arrangements on doors used for egress must comply with requirements of the International Building Code.

Smoke Removal Systems

Smoke Removal. In the event of a blast, the available smoke removal system may be essential to smoke removal, particularly in large, open spaces. This equipment should be located away from high risk areas such as loading docks and garages. The system controls and power wiring to the equipment should be protected. The system should be connected to emergency power to provide smoke removal.

The multidiscipline team should consider having separate HVAC systems in lobbies, loading docks, and other locations where the significant risk of internal event exists.

Smoke removal equipment should be provided with stand-alone local control panels located in the fire command center that can continue to individually function in the event the control wiring is severed from the main control system.

During an interior bombing event, smoke removal and control is of paramount importance. The multidiscipline team should consider the fact that if window glazing is hardened, a blast may not blow out windows, and smoke may be trapped in the building.

The design team fire protection engineer must consult the GSA regional fire protection engineer and the local fire department about the above issues.

8.11 Electronic Security

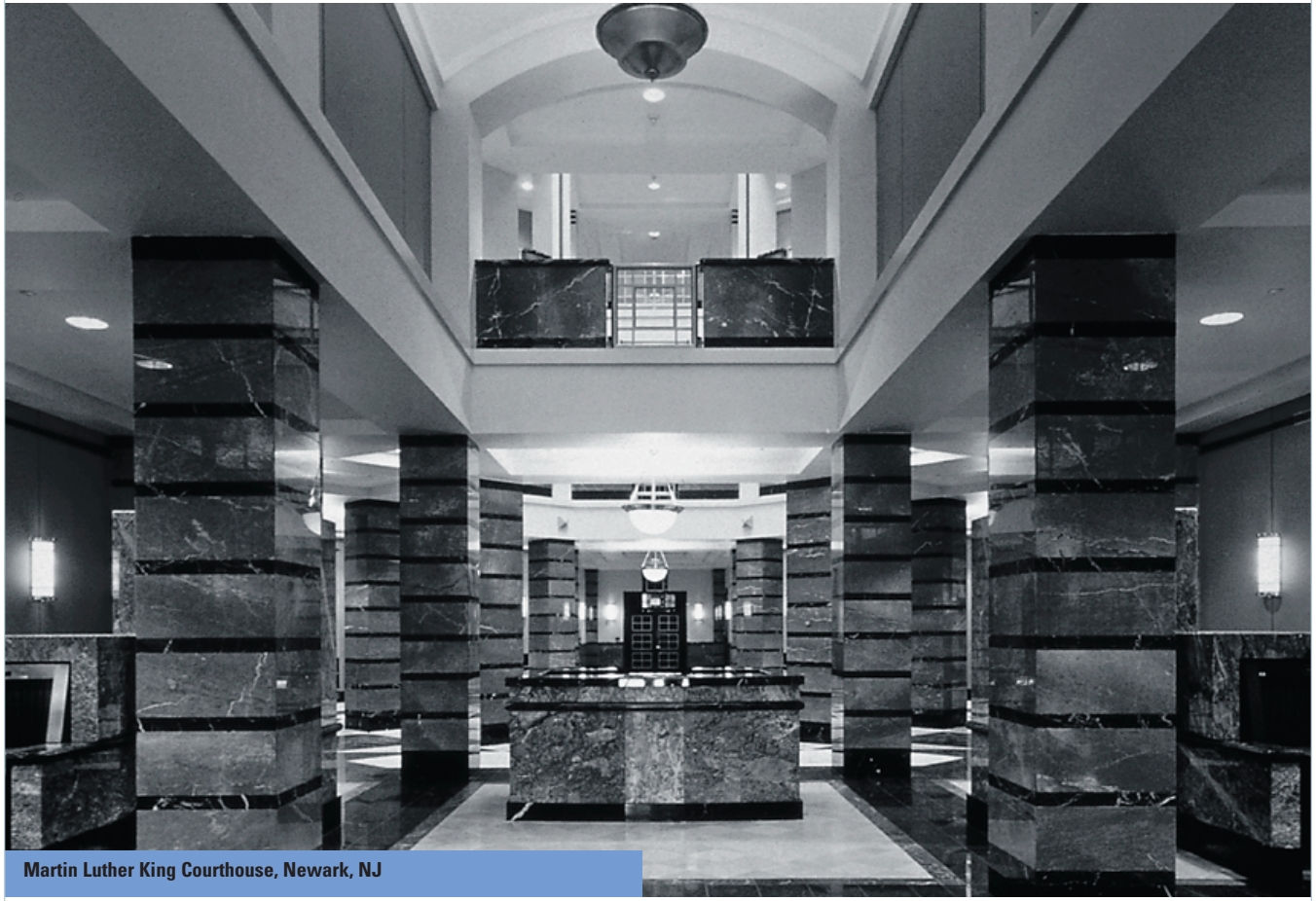

Martin Luther King Courthouse, Newark, NJ

IMPORTANT NOTE: The following criteria do NOT apply to all projects. Follow each criterion only if instructed to by your project-specific risk assessment. Many criteria are based on the recommendations of a specific building risk assessment/threat analysis. Where the criteria include a blank or offer a choice of approaches, the recommendations from risk assessment will provide information for filling in the blank or suggesting a choice of approaches.

The purpose of electronic security is to improve the reliability and effectiveness of life safety systems, security systems, and building functions. When possible, accommodations should be made for future developments in security systems.

This chapter is not a design guide for electronic security systems. The following criteria are only intended to stress those concepts and practices that warrant special attention to enhance public safety. Please consult design guides pertinent to your specific project for detailed information about electronic security (see section on *Architecture and Interior Design, Interior Construction, Critical Building Components* for location of critical building components).

Control Centers and Building Management Systems

Operational Control Center (OCC), Fire Command Center (FCC), and Security Control Center (SCC):

- The SCC and OCC may be co-located. If co-located, the chain of command should be carefully pre-planned to ensure the most qualified leadership is in control for specific types of events.
- Provide secure information links between the SCC, OCC, and FCC.

Backup Control Center (BCC):

- A backup control workstation should be provided in a different location, such as a manager's or engineer's office. If feasible, an off-site location should be considered.
- A fully redundant BCC should be installed (this is an alternative to the above).

Security for Utility Closets, Mechanical Rooms, and Telephone Closets

Key System. Anticipate use of a key system.

Intrusion Detection. Some or all of the following basic intrusion detection devices should be provided:

- Magnetic reed switches for interior doors and openings.
- Glass break sensors for windows up to scalable heights.
- Balanced magnetic contact switch sets for all exterior doors, including overhead/roll-up doors; review roof intrusion detection.

Monitoring

- Monitoring should be done at an off-site facility.
- Use an on-site monitoring center during normal business hours.
- Have a 24-hour on-site monitoring center.

Closed Circuit TV (CCTV)

A color CCTV surveillance system with recording capability shall be provided to view and record activity at the perimeter of the building, particularly at primary entrances and exits. A mix of monochrome cameras should be considered for areas that lack adequate illumination for color cameras.

Duress Alarms or Assistance Stations

Call buttons should be provided at key public contact areas and as needed in the offices of managers and directors, in garages, and other areas that are identified as high risk locations by the project-specific risk assessment.

8.12 Parking Security

IMPORTANT NOTE: The following criteria do NOT apply to all projects. Follow each criterion only if instructed to by your project-specific risk assessment. Many criteria are based on the recommendations of a specific building risk assessment/threat analysis. Where the criteria include a blank or offer a choice of approaches, the recommendations from risk assessment will provide information for filling in the blank or suggesting a choice of approaches.

Parking restrictions help keep threats away from a building. In urban settings, however, curbside or underground parking is often necessary and/or difficult to control. Mitigating the risks associated with parking requires creative design and planning measures, including parking restrictions, perimeter buffer zones, barriers, structural hardening, and other architectural and engineering solutions.

Parking

Parking on Adjacent Streets. Parking is often permitted in curb lanes, with a sidewalk between the curb lane and the building. Where distance from the building to the nearest curb provides insufficient setback, and compensating design measures do not sufficiently protect the building from the assessed threat, parking in the curb lane shall be restricted as follows:

- Allow unrestricted parking.
- Allow government-owned and key employee parking only.
- Use the lane for stand-off. Use structural features to prevent parking.

Parking on Adjacent Properties. The recommended minimum setback distance between the building and parked vehicles for this project is _____ (project-specific information to be provided). Adjacent public parking should be directed to more distant or better protected areas, segregated from employee parking and away from the facility.

Parking Inside the Building

- Public parking with ID check.
- Government vehicles and employees of the building only.
- Selected government employees only.
- Selected government employees with a need for security.

On-site Surface or Structured Parking. Adjacent surface parking shall maintain a minimum stand-off of _____ feet. Parking within _____feet of the building shall be restricted to authorized vehicles (project-specific information to be provided).

Parking Facilities

Natural Surveillance. For all stand-alone, above ground parking facilities, maximizing visibility across as well as into and out of the parking facility shall be a key design principle.

The preferred parking facility design employs express or non-parking ramps, speeding the user to parking on flat surfaces.

Pedestrian paths should be planned to concentrate activity to the extent possible. For example, bringing all pedestrians through one portal rather than allowing them to disperse to numerous access points improves the ability to see and be seen by other users. Likewise, limiting

vehicular entry/exits to a minimum number of locations is beneficial. Long span construction and high ceilings create an effect of openness and aid in lighting the facility. Shear walls should be avoided, especially near turning bays and pedestrian travel paths. Where shear walls are required, large holes in shear walls can help to improve visibility. Openness to the exterior should be maximized.

It is also important to eliminate dead-end parking areas, as well as nooks and crannies.

Landscaping should be done judiciously so as not to provide hiding places. It is desirable to hold planting away from the facility to permit observation of intruders.

Stairways and Elevators:

- Stairways and elevator lobby design shall be as open as code permits. The ideal solution is a stair and/or elevator waiting area totally open to the exterior and/or the parking areas. Designs that ensure that people using these areas can be easily seen — and can see out — should be encouraged. If a stair must be enclosed for code or weather protection purposes, glass walls will deter both personal injury attacks and various types of vandalism. Potential hiding places below stairs should be closed off; nooks and crannies should be avoided.
- Elevator cabs should have glass backs whenever possible. Elevator lobbies should be well-lighted and visible to both patrons in the parking areas and the public out on the street.

Perimeter Access Control:

- Security screening or fencing may be provided at points of low activity to discourage anyone from entering the facility on foot, while still maintaining openness and natural surveillance.
- A system of fencing, grilles, doors, etc. should be designed to completely close down access to the entire facility in unattended hours, or in some cases, all hours. Any ground level pedestrian exits that open into non-secure areas should be emergency exits only and fitted with panic hardware for exiting movement only.
- Details of the parking access control system will be provided for the designer.

Surface Finishes and Signage. Interior walls should be painted a light color (i.e., white or light blue) to improve illumination. Signage should be clear to avoid confusion and direct users to their destination efficiently. If an escort service is available, signs should inform users.

Lighting. Lighting levels should comply with Table 8-3.

The lighting level standards recommended by the Illuminations Engineering Society of North America (IESNA) Subcommittee on Off-Roadway Facilities are the lowest acceptable lighting levels for any parking facility. The above table adjusts the lighting levels according to the protection level. A point by point analysis should be done in accordance with the IESNA standards.

Table 8-3
Maintained Illumination Levels (Footcandles)[1]

Horizontal illumination at pavement, minimum	Low	Low/Med.	Medium	Higher
Covered parking areas	1.25	1.50	1.75	2.00
Roof and surface parking areas	0.25	0.50	0.75	1.00
Stairwells, elevator lobbies	2.5	3.5	4.5	5.5
Uniformity ratio (average: minimum)	4:1	4:1	4:1	4:1
Uniformity ratio (maximum: minimum)	20:1	20:1	20:1	20:1
Vertical illumination 5 feet above pavement, minimum	**Low**	**Low/Med.**	**Medium**	**Higher**
Covered parking areas	0.625	0.75	0.875	1
Roof and surface parking areas	0.125	0.25	0.375	0.5
Stairwells, elevator lobbies	1.25	1.75	2.25	2.75

Emergency Communications. Emergency intercom/duress buttons or assistance stations should be placed on structure columns, fences, other posts, and/or free-standing pedestals and brightly marked with stripping or paint visible in low light. If CCTV coverage is available, automatic activation of corresponding cameras should be provided, as well as dedicated communications with security or law enforcement stations. It is helpful to include flashing lights that can rapidly pinpoint the location of the calling station for the response force, especially in very large parking structures. It should only be possible to re-set a station that has been activated at the station with a security key. It should not be possible to re-set the station from any monitoring site.

A station should be within 50 feet of reach.

CCTV:

- Color CCTV cameras with recording capability and pan-zoom-tilt drivers, if warranted, should be placed at entrance and exit vehicle ramps. Auto-scanning units are not recommended.
- Fixed-mount, fixed-lens color or monochrome cameras should be placed on at least one side of regular use and emergency exit doors connecting to the building or leading outside. In order for these cameras to capture scenes of violations, time-delayed electronic locking should be provided at doors, if permitted by governing code authorities. Without features such as time-delayed unlocking or video motion detection, these cameras may be ineffective.

8.13 Submission Requirements

Every project will have unique characteristics and requirements for submission and review. These shall be coordinated by the GSA Project Manager.

The general submission requirements for each phase of project development are described in Appendix A.

[1] From Chrest, Anthony P., Smith, Mary S., and Bhuyan, Sam. Parking Structures: Planning, Design, Construction, Maintenance and Repair, 2nd edition. Chapman and Hall. (1996).