U.S. General Services Administration

Child Care Center Design Guide

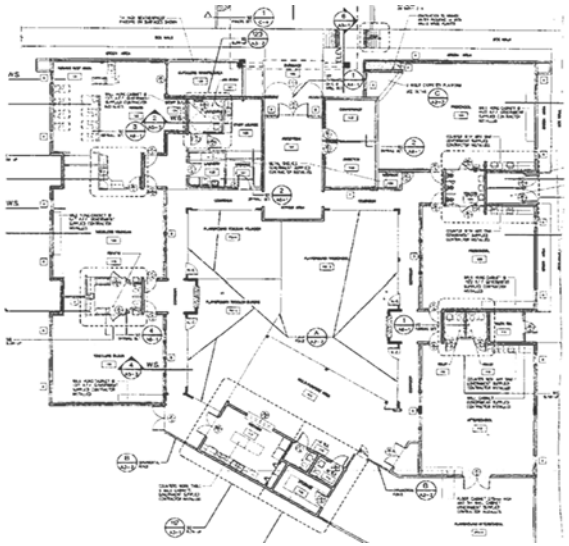

Public Buildings Service
Office of Child Care

PBS DIRECTIVE

SUBJECT: Child Care Center Design Guide

1. Purpose. This directive transmits a revised version of the General Services Administration (GSA) publication, the Child Care Center Design Guide PBS-100, March 2003.

2. Cancellation. The former version of the Guide, PBS 140, dated June 1998, together with its previously published English measurement version.

3. Background. The transmitted document reflects updated guidance and standards based on GSA's experience with design, construction and renovation of centers since the last publication of the Guide. In accordance with the Omnibus Trade and Competitiveness Act of 1988 (Pub. L. 100-418), which mandates the metric system as the preferred system of measurement in Federal procurement, Guide measurements are expressed in the metric system.

4. Instructions. Metric measurement should be used for all design initiated after January 1, 1994.

F. Joseph Moravec
Commissioner
Public Buildings Service

Attachment

Table of Contents

Chapter 1: INTRODUCTION TO THE GUIDE

Chapter 2: MISSION, GOALS, ADMINISTRATION, AND POLICY

Chapter 3: ADULTS AND CHILDREN IN THE CENTER

Chapter 4: NAEYC AND OTHER STANDARDS

Chapter 5: PLANNING FOR SPACE AND LOCATION

Chapter 6: SITE DESIGN

Chapter 7: INTERIOR SPACE DESIGNS

Chapter 8: FURNISHINGS AND EQUIPMENT

Chapter 9: INTERIOR FINISHES

Chapter 10: TECHNICAL CRITERIA

Appendix A: METRIC/ENGLISH CONVERSIONS

Appendix B: POISONOUS PLANTS

Appendix C: CONTACT SHEET

Appendix D: CHILD CARE FACILITY CHECKLIST

Appendix E: SUSTAINABLE DESIGN: TERMS AND GOOD PRACTICES

Appendix F: ACCESSIBILITY

Appendix G: PLAYGROUND SOLICITATION REQUIREMENTS

ACKNOWLEDGEMENTS

The GSA Child Care Center Design Guide contains information obtained from the sources below. However, general concepts, theories, and empirical information obtained from those sources have not been specifically footnoted. The GSA appreciates the use of these valuable resources which provided a strong starting point for the GSA in its effort to establish national standards for child care facilities. The sources are listed alphabetically.

Caring for Our Children, National Health and Safety Performance Standards: Guidelines for Out-of-Home Child Care Programs, Second Edition. American Academy of Pediatrics, American Public Health Association and U.S. Department of Health and Human Services, Health Resources and Services Administration, Elk Grove Village, IL, 2002

An Outdoor Classroom, Steen B. Esbensen, High/Scope Press, Ypsilanti, MI, 1997

Caring Spaces, Learning Places: Children's Environments that Work, Jim Greenman. Exchange Press, Inc., Redmond, WA, 1998

Child Care Design Guide, Anita Olds, PhD, McGraw-Hill, New York, NY, 2000

Child Care Design Institute, Harvard University, Bruce Brook, AIA and Anita Olds, PhD.

Children's Design Group, Mark D. Pavey, AIA, Children's Accessibility Design, Montgomery, AL

City Design Collaborative, Inc., Anita Olds, PhD. Architectural Prototype Document, "Study for the Design of Day Care Centers in State Facilities," Boston, MA, 1987

Constructivist Early Education: Overview and Comparison with Other Programs, R. DeVries, and L. Kohlberg, National Association for the Education of Young Children, Washington, DC, 1987

Custom Playgrounds, Esther Grossman, Play Yard Design, Brooklandville, MD

Designing Settings for Infants and Toddlers in Spaces for Children, Anita Olds, PhD, Weinstein and David (eds), Plenum, 1987

Early Childhood Environment Scale, Thelma Harms and Richard M. Clifford. Teachers College Press, New York and London, 1980

Environmental Coordinator, Sandra J. Jones, General Services Administration, Atlanta, GA

Infant/Toddler Rating Scale, Thelma Harms, Richard M. Clifford, and Debby Cryer. Teachers College Press, New York and London, 1990

Natural Logic, William Reed, AIA, Sustainable Design, Bethesda, MD

Piaget's Theory of Intellectual Development, Herbert Ginsberg and Sylvia Opper, Prentice Hall, Englewood Cliffs, NJ, 1988

Planning and Design of Children's Outdoor Play Environments, U.S. Department of the Army, U.S. Government Printing Office, Washington, DC and National Technical Information Service, Technical Manual TM 5803, New York, NY, 1982

Play and Playscapes, Joe L. Frost. Delmar Publishers, Inc., Albany, NY, 1992

Play for all Guidelines, Susan M. Goltsman, Daniel S. Iacofano, and Robin C. Moore. MIG Communications, Berkeley, CA, 1987

Playgrounds for Young Children: National Survey and Perspectives, Sue C. Worthham and Joe L. Frost, American Alliance for Health, Physical Education, Recreation, and Dance, Reston, VA, 1990

"Psychological and Physiological Harmony in Child Care Center Design", A.R. Olds, PhD, Special Issue of Children's Environments Quarterly, Winter 1989, Vol. 6, No. 4

Quality in Child Care. What Does the Research Tell Us? D.A. Phillips, National Association for the Education of Young Children, Washington, DC, 1987

Raising Children Toxic Free, Herbert Needleman and Philip Landrigan, Avon Press, New York, NY, 1995

Recommendations for Accessibility Standards for Children's Environments, Architectural and Transportation Barriers Compliance Board, M.G.B. Long, and R.L. Mace. Barrier Free Environments, Raleigh, NC, 1992

Recommendations for Child Care Centers (rev. ed.), G.T. Moore, C.G. Lane, A.B. Hill, U. Cohen, and T. McGinty. University of Wisconsin, Milwaukee Center for Architecture and Urban Planning Research, Milwaukee, WI, 1989

Report and Model Law of Public Play Equipment and Areas, M.L. Morrison and M.E. Fish, Consumer Federation of America, Washington, DC, 1992

The Case for Mixed Age Grouping in Early Education, L.G. Katz, D. Evangelou, and J.A. Hartman, National Association for the Education of Young Children, Washington, DC, 1990

What is Quality Child Care? B.M. Caldwell and A.G. Hilliard, III, National Association for the Education of Young Children, Washington, DC, 1985

CHAPTER 1:
INTRODUCTION TO THE GUIDE

1

1.1	Purpose	1-1
1.2	Users	1-1
1.3	Applicable Documents	1-2
1.4	Organization	1-2
1.5	Glossary of Terms	1-3

CHAPTER 1: INTRODUCTION TO THE GUIDE

This chapter describes the purpose of the Guide, its organization, the intended audience, how the information should be applied, and other documents that must be referenced. It also contains a glossary of terms used throughout the Guide.

1.1 Purpose

The GSA Federal Child Care Center Design Guide (hereinafter referred to as the Guide) contains criteria for planning and designing child care centers in GSA-owned or controlled spaces. It is intended for use in developing future centers and expanding or renovating existing ones. Furthermore, it aims not only to specify design criteria but also to explain the rationale for the criteria in order to enhance professional judgment. The criteria contained in the Guide establish the baseline levels of features and finishes to be provided in all GSA centers. The Guide also identifies desired or allowable design features.

The objective of the Guide is to promote centers that are child-oriented, developmentally appropriate, beautiful, environmentally sensitive, health promoting and functional. The designer needs to be aware that a child may be in a center up to 12,500 hours if he or she starts as an infant and continues until entering school.[1] Because children spend such long hours at the center, the design of their spaces is especially critical.

The design effort must allow for, and be sensitive to, the differences in space attributes for children and those for adults as well as the differences in space usage by the children in different age groups. Information about the characteristics and activities of the children is included to provide rationale for aspects of design. The requirements and recommendations set forth in the Guide are aimed at establishing optimal design; though, specific maximum or minimum requirements are stated when appropriate.

The Guide provides a discussion of issues that affect design. It sets the benchmark. If stakeholders believe that certain features cannot be met at a specific center location, these concerns should be addressed to the Office of Child Care through the Regional Child Care Coordinator (RCCC).

1.2 Users

The Guide is intended to be a source of basic architectural information for all individuals involved in the design of Federal child care centers. Individuals seeking detailed information on child care practices, center operations, or general Federal building standards should refer to other documents. Specific users of the Guide include:

Architects and Engineers (A/E's) who will provide design services under the direction of the GSA. In addition, these individuals must use the Guide for pre-design planning or to assess the extent of improvements required in an existing center in order to achieve the standard established herein.

GSA Public Buildings Service in preparation of Prospectus Development Studies (PDS), planning and program preparation. The Guide outlines the special GSA child care center requirements which exceed base building alterations and services for office space.

GSA Regional Child Care Coordinators to interpret the level and type of features and finishes to be provided in centers.

GSA Property Managers to maintain all centers and improve existing ones to meet the benchmarks set in the Guide. In addition, the GSA managers will use it for guidance in repair and replacement of existing conditions and equipment.

GSA Real Estate Specialists when developing Requests for Proposals (RFP) and Solicitation for Offers (SFO) for the procurement of child care center space.

Federal Agencies planning to contract with private sector architectural firms to establish new centers or renovate existing ones.

1.3 Applicable Documents

Other documents that the user must reference include the latest edition of the following:

- The GSA's *Facilities Standards for the Public Buildings Service* contains standards and requirements for all spaces owned or controlled by GSA. It also instructs the user on other codes, standards, and regulations that apply, including access for the disabled, historic preservation, energy conservation, cost analysis, value engineering, fire protection engineering and environmental protection.
- The GSA's *Prospectus Development Study Guide (PDS)* should be referenced when a center is in an above prospectus project. The PBS Guide contains project-specific architectural programs, budgets, and implementation strategies.
- *Federal Management Regulations (FMR 102-19)*, *Assignment and Utilization of Space*, General Services Administration. The FMR identifies policies and procedures for development of space requirements and the use of space in GSA-controlled facilities.
- *Uniform Federal Accessibility Standards (UFAS), Federal Standard 795,* General Services Administration.
- *Americans with Disabilities Act (ADA),* and the *Americans with Disabilities Act Architectural Guidelines (ADAAG)*, Department of Justice, Office of the Attorney General.
- *Accreditation Criteria and Procedures of the National Academy of Early Childhood Programs,* National Association for the Education of Young Children (NAEYC).
- *Developmentally Appropriate Practice in Early Childhood Programs Serving Children from Birth to Age Eight*, National Association for the Education of Young Children (NAEYC).
- *Lead in School Drinking Water*, EPA 570/89-001.
- State licensing requirements for the individual states where Federal child care centers are located.
- *Handbook for Public Playground Safety,* US Consumer Product Safety Commission (CPSC).
- *The Secretary of the Interior's Standards for Rehabilitation and Guidelines for Rehabilitating Historic Buildings*, US National Park Service.
- *Fire Safety Retrofitting in Historic Buildings,* August 1989, Advisory Council on Historic Preservation and the General Services Administration.
- *Lead-Based Paint Interim Guidelines for Hazard Identification and Abatement in Public and Indian Housing*, September 1990, Department of Housing and Urban Development (HUD).
- *Radon in Water Sampling* Manual (EPA/EERF-Manual-78-1), Environmental Protection Agency.
- *The Environmental Resource Guide, with Supplements,* The American Institute of Architects, 1996.
- *Building Security Assessment provided by the regional Federal Protective Service (FPS).*
- *Leadership in Energy and Environmental Design (LEED) Green Building Rating System,* Version 2.0, US Green Building Council, March 2000. Including draft version for Renovation, March 2002. www.usgbc.org
- *Leadership in Energy and Environmental Design (LEED) Reference Guide,* Version 2.0, US Green Building Council, August 2000.
- The Environmental Protection Agency's "*Comprehensive Procurement Guidelines,"* which addresses requirements for use of recycled materials in Government procurement.

1.4 Organization

The following are brief descriptions of each chapter.

Chapter 1: Introduction to the Guide. The chapter describes the purpose of the Guide, its organization, the intended audience, how the information should be applied, as well as other documents that must be referenced. It also contains a glossary of terms used throughout the Guide.

Chapter 2: Mission, Goals, Administration, and Policy. The chapter describes the administration and policies of GSA with respect to child care centers. The chapter also discusses the agency groups involved in the planning and operation of the center, and the process necessary to design a high quality, cost effective child care center. It also deals with real estate

management policies affecting center development, standards with which design and operations must comply, and the GSA goals and objectives for center design and operation.

Chapter 3: Children and Adults in the Center. The chapter identifies those who use the center and how they tend to utilize it. A discussion of children's basic developmental needs and activities for each age group, and how these needs and activities impact the design of the center, is also included.

Chapter 4: NAEYC and Other Standards. The NAEYC criteria for operational programs, including child group sizes and staff-child ratios, are summarized.

Chapter 5: Planning for Space and Location. The chapter describes criteria used in selecting a center location together with planning and programming space requirements, as well as example space programs for various center populations.

Chapter 6: Site Design. Concepts and criteria for site design and design of play yards are provided. The general types of outdoor areas and the relationships of these areas to other outdoor and indoor spaces are described. Detailed criteria for materials, features, furnishings, and equipment required in these spaces are given.

Chapter 7: Interior Space Design. The chapter provides concepts and criteria for the design of the interior spaces within a child care center. Major types of spaces include entry and circulation, staff, classroom, common, and service spaces.

Chapter 8: Furnishings and Equipment. General criteria regarding furnishings and equipment for the center, including references to applicable codes and regulations, are provided in this chapter. At the end of the chapter, there is a list of the furnishings and equipment that may be provided by the Federal Government as part of the baseline provisions.

Chapter 9: Interior Finishes. The chapter provides a consolidated discussion of finishes required in child care centers, establishes the baseline finishes, and discusses acceptable options.

Chapter 10: Technical Criteria. This chapter includes technical criteria and identifies the pertinent regulations which will apply to the Guide.

Appendices: Appendix A provides additional technical information on metric conversion. Appendix B provides listings of appropriate plantings in the vicinity of child care centers. See Appendix C for the GSA Office of Child Care and Regional telephone and mailing information. Appendix D includes two "Design Checklists" designed for use by designers of new facilities and for those assessing existing centers. Appendix E provides additional information on providing a healthful indoor and outdoor environment. Appendix F provides accessibility standards. Appendix G provides information on playground solicitation requirements.

Index: The index provides the page number locations of subject categories and specific terms contained within the Guide.

1.5 Glossary of Terms

Actual Floor Area (AFA) - The square meters required as measured from the inside of partitions, doors, and glazing. AFA includes area required for built-in case goods, fixtures, and equipment. (See Table1.1 on page 1-5)

ADAAG - Americans with Disabilities Act Architectural Guidelines.

American Society for Testing and Materials (ASTM) - The organization that develops standards and provides related information on characteristics and performance of materials, products, systems, and services.

Architectural (or Facility) Program - A written and sometimes graphic document that specifies the architectural requirements that the building design must satisfy.

Board of Directors - A group, ideally of 7-11 individuals, with diverse professional backgrounds and skills to support the selection and oversight of a private center service provider. The board should be a non-profit corporation tasked with fund-raising and distribution of tuition assistance. Boards coordinate closely with GSA's Regional Child Care Coordinators.

Capacity - The total number of children that may be in care at any one time as specified by the license or letter of compliance.

Child Care - A comprehensive service which enhances the productivity of working parents by attending to the development needs of their children. The intention of high quality Federal child care is to allow employees to respond to their dual work and family responsibilities effectively to the benefit of both families and the Government as employer.

Child Care Center - A licensed child care center is a facility, other than a private residence, approved and licensed by a state or other applicable local authority where a person, other than relative or guardian, is compensated to provide care and supervision for 4 or more children under 7 years of age for less than 24 hours a day. For the purposes of this Guide, a "small" center will be one which is licensed for less than 60 children, while a "large" one is licensed for more than 94 children.

Classrooms - The architecturally defined areas that contain each group of children. Classrooms may be separated by full partitions or by partial barriers that also allow controlled visual or acoustical connections to other groups. The internal layout of a child care classroom is markedly different from that of a traditional primary school classroom.

Dead End Corridor - A portion of the egress corridor which does not lead to an exit and which would require an occupant to retrace his or her steps to reach safe exit in an emergency. The maximum allowable length is regulated by applicable codes.

Developmentally-Oriented Child Care - Child care which shows an understanding of the fundamental needs of the developing child, and aids development by providing appropriately structured and free activities throughout the day.

Federal Families - The families of Federal employees.

Gross Floor Area (GFA) - Refers to the total area of all floors of a building including main building lobbies, elevator shafts, egress stairwells and exterior partitions measured to the exterior side of the exterior wall. (See Table1.1 on page 1-5)

Group - Two or more children who are cared for in the same self-contained classroom. In addition, these children have the same caregiver who is responsible to address their basic needs, well being and development.

GSA - The US General Services Administration is an agency of the US Government, which, among other responsibilities, provides and manages building space occupied by Federal agencies.

Infant - A child from birth to12 months.

Mixed-Age Grouping - Mixed-age groups usually contain children ranging from 2 to 5 years old.

Net Usable Floor Area (NUFA) - The amount of space the Government must ***lease*** to accommodate a space requirement. It is comprised of occupiable area plus any additional space (such as corridor spaces) that may be required to meet GSA requirements. (See Table1.1 on page 1-5)

NAEYC (National Association for the Education of Young Children) - A professional organization of early childhood specialists concerned with the care and developmental opportunities provided to children.

NAECP - National Academy of Early Childhood Programs.

Occupiable Floor Area (OFA) - Refers to the portion of the building occupied by a tenant. In the case of a child care center, it includes Actual Floor Area (AFA), circulation, including general circulation external to the classroom as well as circulation internal to the classroom. In general, 20 percent of the occupiable floor area should be considered as general circulation exterior to the classroom. This is fairly efficient circulation and may not always be attainable, depending on the required center configuration. For example, when a center is located within existing space, it may not be able to have the optimally efficient circulation system.
(See Table1.1 on page 1-5)

Office of Child Care - The organization under the PBS Commissioner's Office responsible for the oversight of GSA's child care program. See Appendix C for telephone and mailing information.

Organizing Committee - The committee tasked with studying the feasibility and logistics of establishing a child care center. Composition of the committee typically includes a proportional representation of Federal employees which represent the agency(ies) sponsoring the center. Typically, these individuals may form the core of the permanent Board of Directors.

Parents - For the purposes of this Guide, "parent" is understood to include relatives and guardians responsible for the child in the center.

Pre-School Child - A child who is 3 years old or older and who does not attend kindergarten or a higher grade.

Public Buildings Service (PBS) - A service within GSA dealing with real estate and physical workplace issues. The accountable GSA official for the child care program in each region is the Regional Child Care Coordinator (RCCC).

RCCC - Regional Child Care Coordinator.

School-Age Child - A child who is 6 years of age or older.

Self-Contained Classroom or Area - A room separated by permanent walls or an area separated by permanent or portable partitions or dividers acting as a visual barrier.

Teachers - Individuals providing direct care services to children in child care centers. The term, as used in the Guide, does not denote level of education, training, or staff status. Teachers include head teachers, assistant teachers, caregivers, aides, and all others who interact with children on a routine basis for a major part of each day.

Toddler - A child between the ages of 12 to 36 months. Children between 12 to 24 months of age may be classified as younger toddlers, and children between 24 and 36 months of age may be classified as older toddlers.

Figure 1.1: Space Measurement

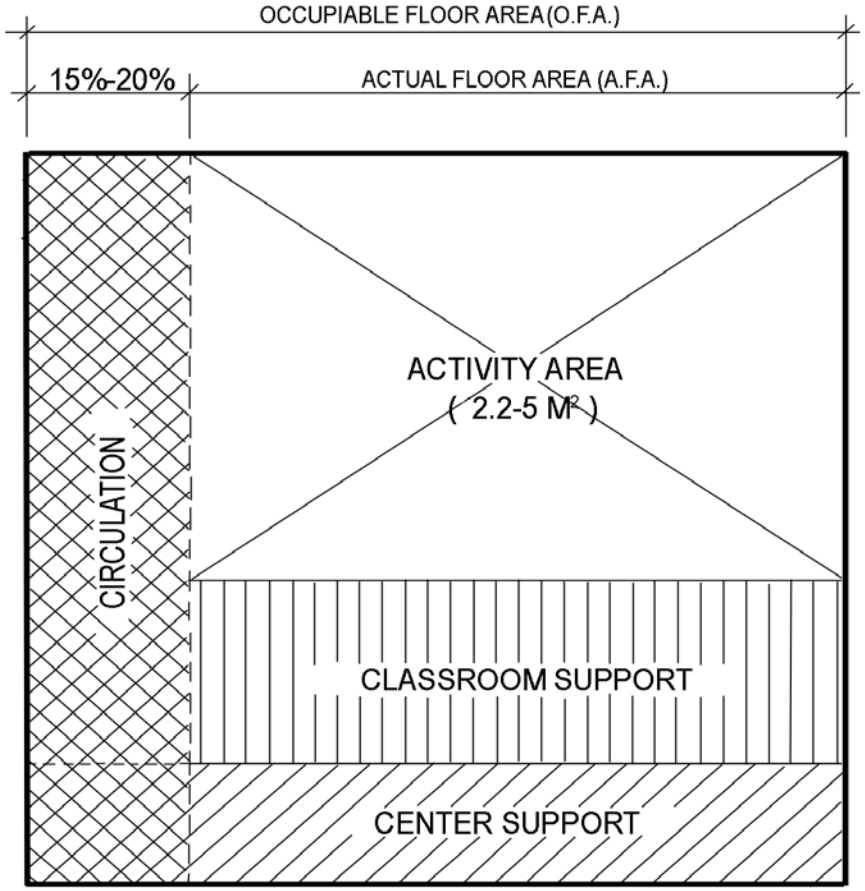

1 Quoted from Dr. Anita Olds

CHAPTER 2:
MISSION, GOALS, ADMINISTRATION, AND POLICY

2

2.1	**Program Goals and Objectives**	**2-1**
2.2	**Process**	**2-2**
	2.2.1 A/E Qualifications	2-2
2.3	**Standards**	**2-2**
2.4	**GSA's Authority**	**2-3**
2.5	**Center Management**	**2-3**
2.6	**GSA Policy for Allocating Cost**	**2-4**
2.7	**A/E Submission Requirements**	**2-4**

CHAPTER 2: MISSION, GOALS, ADMINISTRATION, AND POLICY

This chapter describes the administration and policies of the GSA with respect to child care centers. It discusses the agency groups and processes involved in the planning and design of the center; the operation of the center; the real estate management policies affecting center development; standards with which design and operations must comply; and the GSA goals and objectives for center design and operation.

2.1 Program Goals and Objectives

The primary mission of the GSA Child Care program is to enhance the performance of the Federal employee by offering the opportunity for quality care programs in GSA-owned or controlled space. Families that do not work for the Federal Government may "backfill" slots not used by Federal employees, in order to ensure the viability of the center, Federal employees always have preference for available slots in the center. Should the use of the facility by Federal families fall below 50%, a marketing plan to boost Federal enrollment is to be implemented to raise it to the requisite 50% or greater level required. The center design must meet the needs of children, teachers, administrators, and parents by:

- Supporting the staff's care of children by creating environments that allow them to focus their efforts on the care and nurture of children. The design should provide features which encourage strong, positive relationships between staff and children. It is highly functional.
- Creating an environment that comfortably accommodates the needs of well qualified staff in order to attract and retain them.
- Facilitating family involvement in the center, particularly with the child's caregivers.
- Responding to local conditions, climate, and regional preferences in the design, while also considering the goals of the parents, sponsoring agency(ies), and governing boards of directors.
- Creating an environment that attests to GSA's high level of commitment in providing appropriate, well thought-out and beautiful environments for the children of Federal workers. The appearance and functional arrangement of the center should enhance the Federal asset, especially as it is often a highly visible feature.
- Designing "through the eyes of a child," with a resulting sensitivity to children's scale, including how they will use the space, what they will see, and what kind of experience they will have.
- Providing an intriguing environment, yet one devoid of overpowering colors, features and literal "themes." The designer should avoid such literalness because it inhibits the child's ability to imagine a series of alternate meanings to objects and features.
- Sizing the classroom to accommodate the recommended group size and staff to child supervision ratios. The design should efficiently use space and incorporate ease of the supervisor together with features such as strategically situated storage.
- Providing durable and cost effective materials and details. This is vital when the designer considers the intensity of use that a center receives. The designer must be particularly sensitive to the life cycle cost of materials.
- When there is doubt about historic eligibility, consultation with the GSA regional historic preservation officer is strongly recommended. Adequate time should be budgeted for this possibly involved process. Early recognition of the need for consultation can be crucial to project success. It should be noted that the design and appearance of play yards has also been a difficult issue in the past when they are located near historic buildings.
- *Energy Policy Act of 1992.* The center design must minimize energy use. The design should use the life cycle costing methodology in estimating and comparing investment decisions involving capital and operating costs. Mechanical systems, and introduction of features such as overhangs to diminish long term energy use are examples of such major considerations.
- Establishing a distinctly child-oriented environment within a federally-controlled facility. The impression created by the design should be the antithesis of a typical institutional setting. In other words, the center should "feel like home" for the child.

- Creating an accessible center for the disabled, staff, parents and children in a cost effective manner.
- Providing a healthful indoor and outdoor environment.

2.2 Process

GSA has learned through its design and construction experience that *owner involvement at the beginning of the design process, starting at the initial planning stages,* is the most valuable investment to ensure the excellence and cost effectiveness of the final result. (Note that the beginning of the process starts with planning and pre-design stages and continues through the design concept. The early stages of design, leading up to the concept, form the foundation of an excellent and functional design.)

The design process for new child care centers or major center renovation/expansions must begin with a high level of communication, particularly because a well designed center requires an array of functional and aesthetic requirements in a relatively small space and must satisfy a wide range of "customers."

To accommodate this, GSA will convene a "design workshop," to which all interested stakeholders should be invited, including, but not limited to, property managers, the RCCC, the architectural and facilities representative from the Office of Child Care, the appropriate GSA regional safety professionals, as well as representation from the Board of Directors or the start-up committee, the Agency and the A/E. If regional safety and security professionals cannot attend, their input must be provided. GSA has found that projects which start with a design workshop move ahead more effectively. Additional planning up front has been found, time and again, to be well worth the investment.

This design workshop can also be associated with a partnering session. A partnering session can be highly effective in clarifying roles and responsibilities. It typically results in a written charter which the various attendees are invited to sign in order to commit themselves to taking clearly defined steps for collaboration on a successful project.

2.2.1 A/E Qualifications

Where a request for proposals (RFP) is issued for the project a statement of the key design firm's and the consultants' qualifications in sustainable, high-performance and/or integrative design (as defined in Appendix E) should be included in the qualification requirements.

2.3 Standards

Child care centers must comply with all Federal regulations governing general building types as defined in the latest edition of the GSA's Facilities Standards for the Public Buildings Service. Center design must comply with:

- *Uniform Federal Accessibility Standards (UFAS) and Americans with Disabilities Act (ADA).* The design must accommodate children and adults with disabilities.
- *Historic Preservation Act.* Modification of historic buildings or buildings deemed eligible for the National Register of Historic Places must follow specific guidelines. The GSA Regional Historic Preservation Officer should be consulted during the planning stages for consultation on renovating space in a building.
  1. Which is at least fifty years old (or will be when the renovation is completed).
  2. Which is deemed to be exemplary of a particular style.
  3. Which has historic significance in terms of events to which the building is related.
- *Comprehensive Procurement Guideline* (CPG), US EPA, Office of Solid Waste and Emergency Response. Through this document, EPA designates items that must contain recycled content when purchased by federal, state, and local agencies, or by government contractors using appropriated federal funds. Under E.O. 13101 EPA is required to update the CPG every 2 years.
- *Executive Order (E.O.) 13101 "Greening the Government Through Waste Prevention, Recycling, and Federal Acquisition,"* September 14, 1998.
- *Executive Order (E.O.) 13148 "Greening the Government through Leadership in Environmental Management,"* June 1999.

As terms of the license under which child care centers in GSA operate, after a specified period of time (typically after one year of operation), the provider must commit to beginning the accreditation process of the National

Academy of Early Childhood Programs. This is a division of the National Association for the Education of Young Children (NAEYC). Receipt of accreditation entails approximately one year if the center "passes" at the first opportunity. Accreditation is defined by the Accreditation Criteria and Procedures of the National Association for the Education of Young Children published by the NAEYC.

Refer to Chapter 4 of the Guide for more information. Child care centers must also comply with State and local licensing regulations and any other applicable standards before opening.

The initial stages of the project are the most valuable for the inclusion of sustainable features. See Appendix E for this information.

2.4 GSA's Authority

United States Code 40, Section 590 (formerly 490b) gives Federal agencies the authority to establish child care centers in Federal facilities. This is sometimes referred to as the "Trible Amendment."

The Child Care Program of GSA is responsible for the following:

- Policy clarification on issues which impact child care centers in GSA space. In addition, GSA compiles data on child care centers and execution of the programs' policies. Through its design reviews, the physical status of a center is measured against the baseline set forth in this Guide. The purpose is long-term budgeting for the nationwide program to establish a "master plan" that brings all centers to a minimum level established in the Guide.
- Resources and training to Regional Child Care Coordinators and Property Managers and the national child care community.
- Periodic training events for regional program coordinators, center staff, providers, governing boards, and agency representatives, as well as provision of training materials.
- Special projects and publications on new initiatives and policies.
- Sponsorship of the Interagency Task Force on Federal Child Care.
- Consultation on Planning, Concept Design Review and final approval for center design concept. <u>In order to expedite the design process and to help ensure that the final outcome meets national program objectives, the facilities expertise of GSA's Office of Child Care must be involved in the design and planning process at the earliest stages.</u> When a Prospectus Development Study (PDS) is initiated, for instance, which GSA's Portfolio Management Division has determined will involve a new or expanded child care center, GSA's Office of Child Care <u>must</u> be involved. It is at the planning stage that the important budgeting decisions are made. The planning process recommends allotment of funds for components and features which, while having a higher first cost, will lower the life cycle costs of the center. Unless these are considered at the initial planning stages before actual design begins, the budget will rarely be adequate to ensure their incorporation. When that happens, the Government has missed an opportunity for long-term savings.

When the Regional Child Care Center Coordinator (RCCC) recommends approval of the design concept, working drawings for the project may proceed. <u>The Office of Child Care must also review the drawings as the details are developed (typically at the 50-60 % level of completion) to ensure that the level of detail is congruent with the objectives of the Design Guide and the Program.</u>

GSA has a network of 11 RCCC's (see Appendix C for telephone numbers and addresses) who deliver the following services:

- Provide guidance, assistance, and oversight to Federal agencies during the development and operations of child care centers.
- Provide program review, and oversee licensing compliance.
- Provide on-going technical assistance and resources to governing boards, organizing committees, and Federal agencies, as well as, (indirectly) to child care center directors and providers.

2.5 Center Management

GSA does not directly operate GSA child care centers. GSA grants authority for the day-to-day management of the center either to a Board of Directors or to a private provider. These entities use Federal space to operate the child care center under a revocable license agreement, which includes a series of special conditions.

The principle management model and the parties involved are as follows: The Board of Directors (which is not a GSA entity) contracts with private sector providers. Variations of this model may exist, depending upon circumstances. For instance, the sponsoring agency may obtain the license and contract directly with the provider. GSA has a Board of Director's Manual which can be obtained, together with other information, through the RCCC.

Regardless of which management model is utilized, a Parent Advisory Committee (PAC) may be established. The purpose of the PAC is to inform parents, provide input to the center, raise funds, and provide volunteers. A representative of the PAC generally serves as a liaison for the parents, either by serving on the board or by working directly with the agency.

2.6 GSA Policy for Allocating Costs

GSA's Public Buildings Service (PBS). The GSA's PBS is the "landlord" for child care centers located in GSA-owned or controlled space. The GSA PBS typically provides finished space, and will provide planning, design, and construction services. Center rent is typically billed as "joint use" space. PBS collects the annual user charge from the sponsoring agency (ies). GSA, in partnership with the sponsoring agency, ensures that telephone services, utilities, physical maintenance and janitorial services are provided to the center and that the space is safe and environmentally healthy.

Rent charges are set per GSA's pricing policy. It is GSA's intent to provide an operable center for the sponsoring agency(ies). The following are the baseline provisions for child care centers in the GSA system:

- Standard finishes and features for typical office space prescribed by the latest edition of GSA's Facilities Standards for the Public Buildings Service.
- Cabinets, millwork, and all built-in items as defined in the Guide.
- Special finishes and features as defined in the Guide.
- Furniture and equipment as listed in the Guide (subject to RCCC approval).
- Power, conduit for wiring, and space for electronic communication and security equipment as defined in the latest edition of GSA's Facilities Standards for the Public Buildings Service.
- Security equipment as defined by the GSA, based on the FPS Building Security Assessment for the identified site. Power, conduit for wiring, and space will be provided as defined by the latest edition of GSA's Facilities Standards for the Public Buildings Service. Security equipment requested for the center, but not required by the GSA, will be funded by the requester and provided by GSA.
- Fire protection systems (e.g., fire detection, fire alarm, and fire suppression) as defined by the latest edition of GSA's Facilities Standards for the Public Buildings Service and as amended in the Guide.
- Laundry equipment and a kitchen with heavy duty equipment, capable of accommodating full food service or meals prepared by an on-site cook. Specifics about the grade of required equipment must be clarified at the time of the concept design.

2.7 A/E Submission Requirements

- Fully readable, half-size drawings are to be submitted to the RCCC and the Architect, Office of Child Care, for review at various stages of design development as per the scope of work for the project.
- A sample board of finish materials is to be submitted to the RCCC and Architect, Office of Child Care, for approval.
- Paint mock-ups as detailed in this Guide for selection purposes.

CHAPTER 3:
ADULTS AND CHILDREN IN THE CENTER

3.1	**Adults**		**3-1**
	3.1.1	Parents	3-1
3.2	**Staff**		**3-2**
	3.2.1	Teachers	3-2
	3.2.2	Administrators	3-2
	3.2.3	Service Personnel	3-2
3.3	**Children**		**3-3**
	3.3.1	Infants	3-3
	3.3.2	Young Toddlers	3-5
	3.3.3	Older Toddlers	3-5
	3.3.4	Pre-School Children	3-5
	3.3.5	Kindergarten	3-6
	3.3.6	School Age Children	3-6
3.4	**Anthropometric Information**		**3-7**

CHAPTER 3: ADULTS AND CHILDREN IN THE CENTER

This chapter identifies users of the center, the basic needs and activities of each age group, and how these needs and activities impact the center design.

The design of the child care center should accommodate the needs of children, parents, teachers, administrators, and service personnel in a comfortable and nurturing environment. It must allow adults to care for children in settings designed primarily for use by children. The following summarizes the needs of each group.

3.1 Adults

3.1.1 Parents:

Congress granted authority for use of Federal space for child care to increase worker productivity that results from on-site child care. Like many private employers, the Government saw that providing parents with the opportunity for quality child care could enhance the performance of the organization — especially because the majority of worker absences result from the breakdown in child care arrangements.

So, the designer should keep the needs and convenience of these busy adults in mind when planning and designing the center. At the same time, the design should provide a setting that supports a community of center users. This will serve the needs of the children and the agency. It will enhance a natural, home-like environment for children and will increase the employee's allegiance to the workplace as a quality, family-friendly environment. The design can respond to the needs of parents by addressing:

- Temporary parking arrangements for drop-off and pickup.
- Ease of navigating corridors with strollers and buggies (angled corners are an aid).
- Stroller storage.
- A clearly visible bulletin board location.
- Mail boxes dedicated to the needs of parents.
- Central, relaxed-feeling place for parents to meet and chat with other parents and staff, and to deposit tuition checks, etc.
- Ease of assisting children with outer garments in spaces designed to accommodate several children and adults as they do the same.
- Private space for parent/teacher to conference.
- Adequate refrigerator space to store formula and food.

Adult family members spend time in the center in several different ways, including arriving with the children, picking them up to take them home, as well as spending time with them while at the center. For instance, parents may eat lunch at the center with the children, meet with teachers and staff, socialize with other parents, and participate in center activities, organizations, and programs. The center may even function as a focus for human contact and stress reduction that is not possible within the worker's own work environment.

For instance, parents accompany their child to the classroom. When they arrive there, the parents usually help children remove and store their outdoor clothing. They may bring infants in strollers. They also leave messages for teachers and receive messages from them, usually at one location designed specifically for that purpose. They may linger to spend time with the child or to talk to the teacher before departing. The entry, reception, and classroom cubby areas provide a social setting for the parents, without disrupting the flow of activity in the classrooms.

Parents may visit their children during the day. Nursing mothers might visit the center to feed their infants and, therefore, a private, intimate-feeling, area should be provided for them to do so.

Parents also come to the center for conferences with teachers. Information may be posted for the parents on a bulletin board, typically located along the entrance path. The center will have slotted fee boxes for tuition checks and small cubbies for private mail communications between the parent and the center. These must be considered in the design. Finally, parents are encouraged to participate in volunteer activities at the center such as serving on committees or boards, participating in fund-raising activities, assisting with field trips, and various types of classroom assistance.

3.2 Staff

3.2.1 Teachers:

Teachers care for and supervise the children. In a quality program, they promote learning and developmental activities through a curriculum designed for stimulation and development. Curriculum activities occur not only in classrooms, but in play yards, multiple-purpose spaces, and on excursions outside the center. Teachers are responsible for the children while at the center, including greeting them and their parent when they arrive. Teachers ensure that only authorized individuals pick up the children at the end of the day.

Teachers also prepare curriculum materials and projects for the children and confer with the parents and administrators. Teachers need time away from their classroom in a separate lounge, which may double as a workroom. They need adequate storage areas, not only for curriculum materials and supplies, but also to lock up their personal effects. Because their job is demanding, the designer should focus on creating organized arrangements so that teachers may focus more easily on the children. This is one of the core challenges in designing a center. The design can facilitate the needs of teachers by providing:

- Ample elevated wall hung storage (above children's level but also located to avoid the possibility of adults striking their heads on it). All elevated storage should be designed to avoid the possibility of items inadvertently falling on children below.
- Elevated electrical outlets for equipment such as audio devices. (There should also be CD and tape storage.) Locations should be coordinated with the RCCC and with the provider (if possible).
- Planning and designing the center so that location of outlets is convenient to elevated electronic equipment.
- Conveniently located, accessible adult toilet(s), complying with ADAAG.
- Convenient storage for teachers' outer garments and items such as boots, etc.
- A comfortable and private place to confer with parents.
- A resource room where teaching materials and equipment can be stored in an orderly and highly visible fashion.
- Locked space to store personal belongings.
- A comfortable lounge which teachers can use for breaks, lunches, and to prepare teaching plans and materials.
- Adequate shelving or counter space for teachers to display teaching materials within the center.
- An easy means of displaying children's art projects at children's level.

3.2.2 Administrators:

Also referred to as directors, these individuals are responsible for managing the center, supervising the teaching staff, and communicating with parents, boards of directors and the GSA Regional Child Care offices. In small centers, the administrator may also assume a teaching role for part of the day. In large centers, the director will usually have a secretary or assistant to help with the administrative workload. The needs of the Center Administrator can be met by providing:

- An optimal amount of visibility, particularly to easily observe those approaching and entering the facility.
- Locked space for personal belongings.
- An adequately sized office with room for a desk, an office chair, at least two visitor chairs, filing cabinets, space for equipment (unless it is located elsewhere) including a personal computer, printer, copier and fax machine.

If provider personnel, including the administrator, are consulted during design, their input about work flow, filing and equipment needs can be very valuable. However, the designer should be aware that the provider works under a GSA license. The provider, in effect, is the tenant and GSA is the owner or controller of the space. Therefore, provider's guidance should not be interpreted as a directive, especially when it contradicts elements of this Guide or the direction of GSA personnel charged with control of the space.

3.2.3 Service Personnel:

Centers require food, laundry, janitorial service, delivery, waste and refuse removal, and general maintenance services. The design must provide space and controlled access for personnel or contractors performing these services.

Some of the centers located in GSA-owned or controlled space purchase catered food service, but the baseline facility should contain an in-house preparation kitchen with heavy-duty equipment and a cooking staff.

Laundry services will typically be performed by the teaching staff. Infants and toddlers generally use disposable diapers provided by parents. All soiled diapers are contained and processed separately from other waste

and linens. Facilities need to be provided for this. The needs of the service personnel can be expedited by:

- Adequate space in janitor's well-located closet for cleaning materials.
- Ease of supply delivery.
- Efficiently designed facilities for waste disposal.
- Adequate locked storage for toxic materials.
- Easily implemented recycling programs.
- Adequate counter space and efficient kitchen arrangement.
- Adequate refrigerator space.
- Generous, deep, three-compartment sink and gooseneck faucets with spray attachment and disposal in kitchens.
- Finish materials and building design features that are easy to clean with minimal use of unhealthful cleaning materials (see LEED draft renovation guidelines).
- Protection from the potential health and indoor air quality impacts of cleaning and maintenance activities by the use of appropriate design features (see section 7.6.18).

3.3 Children

Pre-school and younger children spend an average of nine hours per day at the center. For most of their care, children remain at the facility. There are occasions when the children leave the center on field trips with teachers and center volunteers. The center must promote a child's optimal development by providing safe, interesting, health-promoting, and appropriate environments which allow the children to engage in developmentally appropriate activities.

Children's needs, in many respects, correspond to their age. Although each child develops according to his or her unique schedule, children can be characterized as belonging to general age categories of development, with each age group having a different set of needs. To meet these needs, the space for each age group will be inherently different.

The following four broad age groupings will be referred to throughout the Guide. In any individual center, actual age ranges between groups may overlap. In some centers, children may be grouped in mixed-age classrooms. Age ranges are as follows:

- Infants (birth to 12 months)
- Toddlers (12 to 36 months), including subgroups of:
- Younger toddlers (12 to 24 months)
- Older toddlers (24 to 36 months)
- Pre-school children (36 months and older, not in kindergarten)
- School-age (6 years and older; enrolled in after-school or summer programs at the center)

Centers typically do not care for children over 5 years of age unless the center runs a summer program, a kindergarten, or a before and after school care program.

3.3.1 Infants:

For the infant, the environment must provide many opportunities for activities throughout the day. The infant classroom needs to be warm and nurturing in character. Typically, infant groups will be comprised of six to eight infants cared for by two teachers. Infants are brought to their classroom by their parents. Clothing and supplies, usually carried in a diaper bag, are placed in each infant's cubby storage space. Diapers and wipes are stored in separate compartments at the diapering area within easy reach of the changing table. Strollers or tote bags that are left at the center during the day should be stored on pegs or rods in storage areas. Formula is kept refrigerated.

As infants mature, their sleep needs decrease from the frequent naps of young infancy to a few naps at regular times during the day. Because each infant may have a unique schedule, a variety of activities can take place in the infant room at any given time, ranging from playing, diaper changing, and eating to sleeping, cuddling, and nursing. This variety of activities requires that quiet areas be separate from more active areas.

Most infants have not begun toilet training, so frequent diaper changes are needed. When teachers are with an infant at the diaper changing table, they also need to supervise other infants and maintain visibility to other infants. Visible connection between teacher and infant should be maintained to the maximum extent feasible. The design and location of changing tables should reflect this requirement. Teachers' view into the activity area should be unobstructed while at the diaper changing area. When infants are in the activity area, they must be able to see teachers as well.

During the first year, the infant's diet progresses from nursing and bottle feeding to soft foods and finger foods. For young infants, eating is a nurturing time, with the infant either nursed by the mother or held by a teacher or parent during bottle feedings. Teachers may start to feed infants soft foods at around 5-6 months. At around 9 months, infants, seated in low high chairs, begin to feed themselves and drink from cups. This process can be

very explorative and messy. At around 12 months, infants eat at low, round tables. The dining atmosphere changes from a quiet, intimate environment to an active, social event.

Developmentally appropriate activities for this group include interaction with teachers, children, and other infants; experiencing the environment through all the senses; and physical movement through the space. Infants need a safe, stimulating environment where they can explore, absorb, and organize information about their world. They exercise muscles by crawling and climbing on soft surfaces and over slight level changes. They can pull to standing and practice walking by using low grab bars.

Manipulative, stimulating toys and other learning materials help infants learn about objects and enable them to develop motor coordination. Toys should be placed on low, open shelving where the infant can see and grasp them. In rooms with high ceilings, mobiles may be hung from the ceiling at least 2035 mm above the floor.

The classroom should offer a series of intriguing attractions for crawling and standing infants, particularly at eye level (300 mm - 450 mm above the floor). The environment, including toys, aids in the infants' language development. The design and scale of furnishings and equipment in the infant room should support the infant's activities, while assisting the care-giving adults. The design must allow teachers to see and hear all the infants at any given time, and quickly reach any one of them if the need arises. Infants also must be able to readily see the teacher as they need the psychological security of a teacher's presence.

Infants spend time in their outdoor play yard under the supervision of their teachers safely apart from, but usually in view of, the older children. Infants, particularly those that are crawling and starting to walk, require outdoor opportunities to explore and move about the safe world of the infant play yard.

Teachers may assist infants in their exploration of the world by taking them on "strolls" through the building and outdoors. Infants, riding in groups in multi-passenger strollers, benefit from both social interaction and sensory stimulation from these excursions. Some conditions that will greatly enhance the quality of care which teachers can provide include the following:

- Gross motor area (away from the main circulation flow) that is soft and easily cleaned, with a provision of continuous soft mat. Typically, the area should be defined by a low (300-450 mm) padded bumper which may or may not be built-in to contain the crawl area and to provide for adult seating near infant's level.
- Low padded risers for level change.
- Visual contact with the exterior at infants' eye-level.
- Cribs directly observable by teachers.
- Cribs located under soft, preferably dimmer-controlled lighting.
- Toys easily accessible to the infants from open shelving.
- Provision of continuous impervious flooring in the feeding area.
- Provision of space for infants to eat in a social environment (as opposed to an isolated, lined up high chair arrangement).

Though the actual equipment is provided by GSA, it is essential that the A/E verify dimensions and indicate the location (using dotted lines) of all major equipment, particularly cribs and feeding components on the architectural plans. This will ensure the proper fit and clearances are achieved in the final result.

The conceptual sleeping area arrangement shown below uses clear vision divider panels to allow for more efficient placement of cribs. Small, three-drawer dressers placed between the cribs create the feel of a homelike bedroom, provide additional storage for diapers, and provide necessary clearance between cribs. Check with local licensing to ensure applicability.

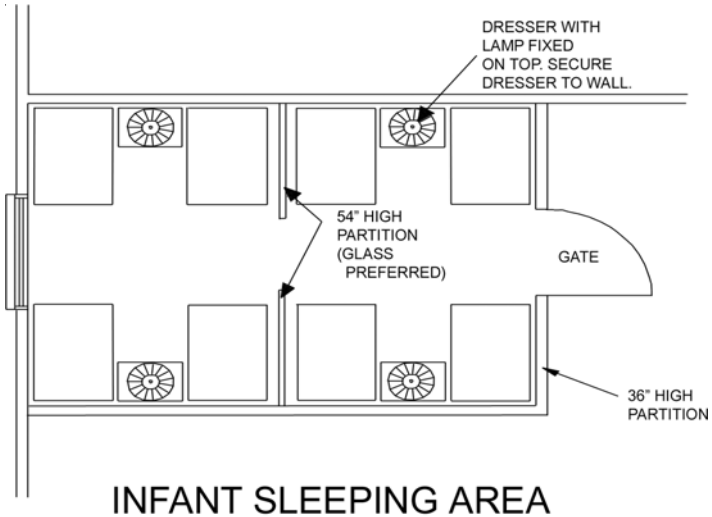

INFANT SLEEPING AREA

3.3.2 Young Toddlers:

The toddler classroom hums with activity as toddlers quickly move through their space, involved in all the activities available to them. This environment needs to be stimulating, offering the child a safe, yet warm and nurturing place to spend the day. Often, this group includes 2 teachers and 10 to 12 younger toddlers or up to 14 older toddlers.

At the beginning of the day, toddlers arrive at the classroom with their parents who may assist them with removing their outdoor clothing and storing items in their cubbies. Young toddlers will usually have diaper bags to store in their cubbies and supplies to be placed at the diapering area. The older toddlers may bring lunches or toys from home, perhaps carrying them in satchels or backpacks which can also be used to carry such things as papers and art work home at the end of the day. Satchels and backpacks may be stored in the cubbies or within the classroom on hooks provided.

Toddlers are in the process of gaining independence, advancing in their feeding, toileting, and dressing skills. Furnishings and equipment need to be scaled for this age group to encourage growth toward independence. Older toddlers may nap only once a day on cots or mats which are stored while not in use, while younger toddlers may nap more often and need a crib in a quiet area. Most care functions take place in the classroom with the teacher's assistance.

Toddlers gather at child-scaled tables for snacks and lunch time. They can feed themselves with some assistance from their teachers. Toddlers are beginning toilet training and require a child-scaled toilet area in their classroom. Young toddlers still need diapering areas as well as child sized toilet facilities.

3.3.3 Older Toddlers:

Toddlers are busy experiencing their environment, developing essential motor skills as they take part in active play. They are mastering walking, and are beginning to develop running, jumping, and climbing skills. Toddler rooms need to provide stimulating opportunities for active crawling, pushing wheeled toys, climbing in and out of play components, cruising, (movement through space to view and select from a variety of activities), as well as beginning to walk, and climbing up and down stairs. Toddlers tend to move about very quickly, often in groups rather than individually, and the design must allow for this group action. Features such as wide access to lofts and generous, clear pathways (no sharp corners) should be provided.

This age group is involved in other developmental activities as well, such as beginning block play and social play and space must be provided for these activities. The development of language skills is assisted through the use of simple books, pictures, puzzles, and music.

Toddlers thrive on exploration and creativity; enjoying fantasy activities, playing with props, and making choices. Manipulative toys and materials should be located on low, open shelving where the toddler can see and easily reach them.

Teachers in this classroom assist and interact with the toddler, encouraging the development of greater independence. Though space should be generally scaled to child size, the classroom design must also permit teacher access to all spaces. To enhance the functioning of the center, experience has shown that a diaper changing table should be provided in older toddler classrooms, even though older toddlers are typically toilet trained. This addition will help teachers.

While toddlers are beginning to develop, they need easy visual access to their teachers for security and comfort. A functional and nurturing feature which is highly recommended is a simple series of three to four low risers which several toddlers at a time can occupy. This arrangement also provides excellent seating for adults while they interact with several children — reading them a story, for example. This need not be a built in feature.

Toddlers, accompanied by their teachers, will spend time in their outdoor play yard, apart but not visually or acoustically separated from older children's play yards. The outdoor space offers many opportunities for activities such as cruising, climbing, and manipulative play involving materials such as sand and water. This group may take part in activities in a multiple-purpose area as well.

Toddlers, with their teachers, may go outside the building on excursions, allowing for more exploration and interaction. Younger toddlers may need to be transported in multi-passenger strollers. Older toddlers may walk hand-in-hand with their teachers.

3.3.4 Pre-School Children:

Pre-school children are expanding their vocabulary, and are developing language, small and large muscle coordination, and complex cognitive/ social skills. This group may consist of as many as 18 to 20 pre-school children (with 2 teachers) busily pursuing all the recommended activities

available to them in an environment which is safe, durable, and interesting without overstimulating the children.

These children arrive at the classroom with their parents and, after storing their outdoor clothing and personal items (perhaps using a satchel or backpack), they begin their day in the center. The pre-school classroom needs large, bright, unrestricted spaces, as well as intimate, quiet areas with soft materials.

Pre-school children usually need a nap or quiet time. This normally occurs in the classroom space on cots or mats that are stored when not in use. Mealtime is an opportunity for social interaction as the children and their teachers gather around tables in the classroom to eat snacks and lunch.

Children at this age are actively exploring their environment; exercising large muscle skills by running, jumping, galloping, riding wheeled toys, and playing various ball games. The pre-school classroom requires a large amount of architecturally unrestricted available space which teachers and children can divide into smaller learning environments. The number of children in the group and the type of activities in which they are involved impact this space requirement. Because they have typically become more independent, they tend to initiate their own activity by accessing appropriate materials and by displaying their own work.

Other activities for this group are dramatic play, music, painting, puzzles, block play, and storytelling. Children are involved in projects, including art, manipulative play, simple food preparation, elementary math, problem solving, science, and gardening.

Pre-school children will spend a lot of time in their outdoor play yard as weather permits and also in a multiple-purpose space, if provided. They will participate in many of the same activities in the play yard as those pursued in the classroom. Children will also go on field trips outside the center, either walking with their teachers or being transported.

3.3.5 Kindergarten:

Kindergarten classrooms, when provided, will have a layout similar to the pre-school classroom except provide separate, accessible boys and girls toilet facilities with partitioning for privacy if more then one is provided. Local licensing requirements must be met. Note that in some states, separate toilet facilities are required for children 48 months and older. It is the designer's responsibility to ascertain local requirements.

3.3.6 School-Age Children:

School-age children come to the center for before/after-school care and, holiday and summer programs. Their needs differ from pre-school children, and the area of the center devoted to them should reflect those differences, including the need for separate male and female toilet facilities.

This group can have as many as 20 to 24 children with 2 teachers. Their classroom, and ideally even its entrance, should be somewhat apart from the other classrooms. The area should include appropriately scaled furnishings and equipment, and a slightly more sophisticated "clubhouse" atmosphere.

School-age children spend their time in the center involved in developmentally appropriate activities. They may eat or snack, do homework, enjoy audiovisual entertainment, play games, and participate in active games and outdoor sports. Children coming to the center from a full-day school program need space that is homelike and comfortable, that provides areas for both quiet activities and more active play.

After-school programs require a separate classroom, but not one necessarily contiguous with the rest of the center. Summer programs for school-age children may utilize a flexible area within the center, such as the multiple purpose space. The summer group is taken on many excursions outside the center and generally utilizes the center space only for the beginning and end-of-day portion of their program. The needs of this age group can be accommodated by providing:

- Adequate space for storage of children's personal belongings.
- Low shelving for teaching materials, toys and manipulatives.
- Generous amounts of impervious floor area under eating and messy project areas.
- Corners left unencumbered by storage so they can be used as interest areas, "retreats", or for activities.
- A loft that presents physical challenges as well as a "place apart" for gathering of small groups.

ANTHROPOMETRIC DIMENSIONS

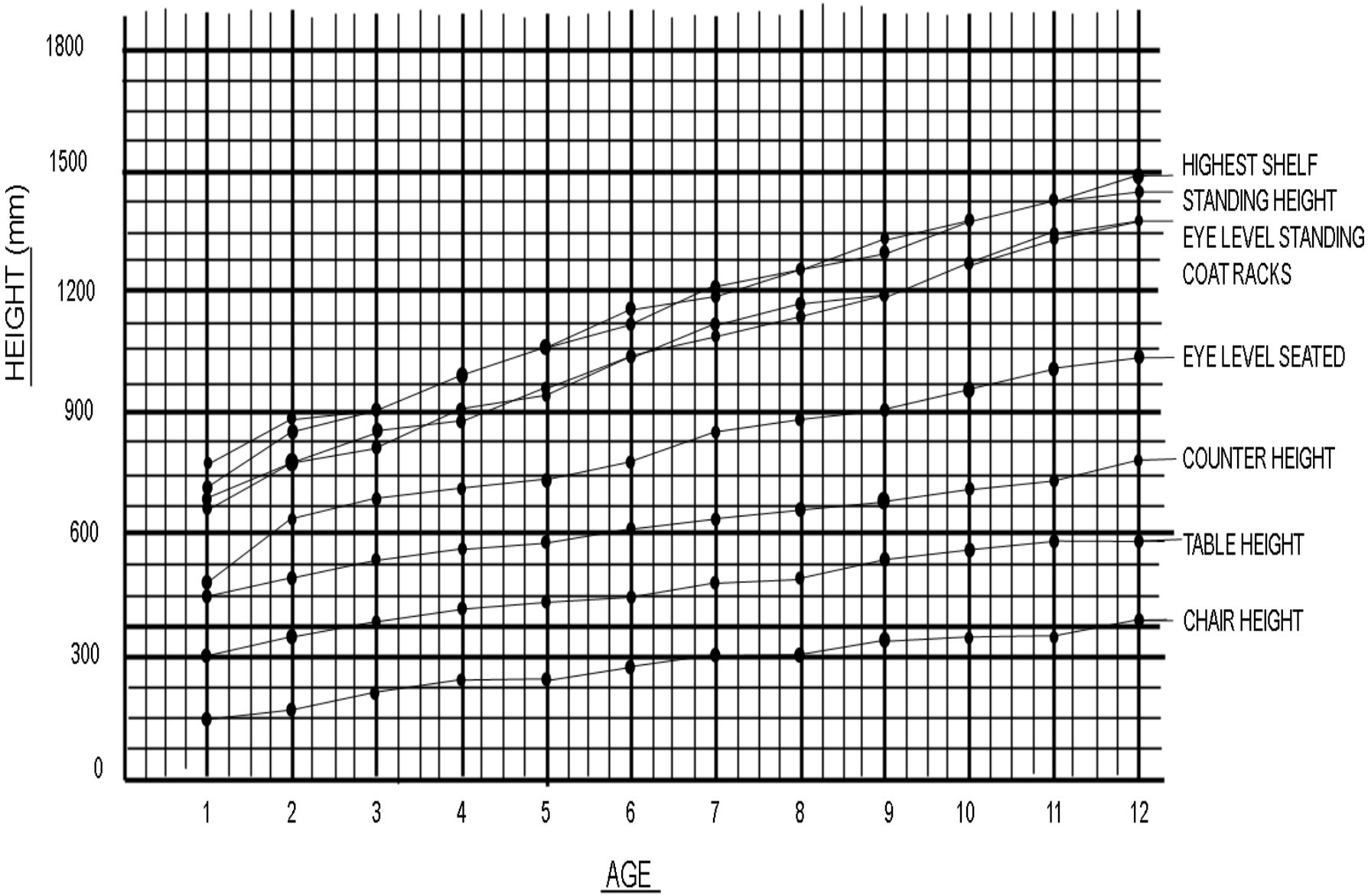

3.4 Anthropometric Information

For average physical dimensions of children according to their chronological age reference the following:

Child Data - The Handbook for Child Measurements and Capabilities - Data for Design Safety
Authors; Beverly Norris and John R. Wilson
Published by DTI; Department of Trade Industry
Institute for Occupational Ergonomics
Department of Manufacturing Engineering and Operations Management
University of Nottingham
University Park
Nottingham
NG7 2RD

CHAPTER 4:
NAEYC AND OTHER STANDARDS

4.1	**NAEYC Program Criteria**		**4-1**
	4.1.1	Interactions Among Staff and Children	4-1
	4.1.2	Curriculum	4-1
	4.1.3	Staff-Parent Interaction	4-1
	4.1.4	Staff Qualifications and Development	4-2
	4.1.5	Administration	4-2
	4.1.6	Staffing	4-2
	4.1.7	Physical Environment	4-2
	4.1.8	Health and Safety	4-2
	4.1.9	Nutrition and Food Service	4-2
	4.1.10	Evaluation	4-3
4.2	**Group Size and Staff-Child Ratio**		**4-3**
4.3	**Additional Requirements**		**4-3**

4

CHAPTER 4: NAEYC AND OTHER STANDARDS

This chapter summarizes the National Association for the Education of Young Children (NAEYC) criteria for operational programs including child group sizes and staff-child ratios. NAEYC is a nationally recognized accrediting body, and its criteria are in addition to state and local licensing and code regulations. Should conflict arise between NAEYC criteria and other applicable codes and regulations, those deemed most restrictive will apply.

4.1 NAEYC Program Criteria

The NAEYC criteria are stated in ten broad categories, each having a primary goal. The following are citations of the minimum goals[1] and discussion of the general design implications. The purpose of the design criteria in the Guide is to achieve or exceed the NAEYC goals. Note that a center can be accredited and still fall short of GSA's minimum facility guidelines.

4.1.1 Interactions Among Staff and Children:

GOAL: Interactions between children and staff provide opportunities for children to develop an understanding of self and others and are characterized by warmth, personal respect, individuality, positive support, and responsiveness. Staff facilitate interactions among children to provide opportunities for development of self-esteem, social competence, and intellectual growth.

A prime objective of a successful design is to create conditions that allow caregivers and children to interact both verbally and non-verbally in large and small groups. To do this successfully, classroom space should not appear crowded. It should include low tables, several interest areas and the space for caregivers to communicate individually with children. If there is adequate space, and the arrangement allows, tables and counters which put children face to face can help promote an environment that encourages social interaction. All rooms should have comfortable seating for adults. Window seats are particularly inviting for adult/child interaction as long as other areas allow for program activities (science/grouping projects, for instance). To engender the desirable trust between caregivers and infants as well as visiting parents, it is desirable to have space for glider chairs in infant rooms of the type that will not allow children to catch fingers in moving parts.

4.1.2 Curriculum:

GOAL: The curriculum encourages children to be actively involved in the learning process, to experience a variety of developmentally appropriate activities and materials, and to pursue their own interest in the context of life in the community and the world.

Classrooms must have sufficient space, equipment, and storage to support a developmentally oriented curriculum. Classrooms must be configured well enough to allow circulation to each area while minimizing disturbance to other children engaged in an activity. Well located storage is absolutely vital to maintaining ease of circulation and supervision. The center must have child-accessible displays of curriculum materials, either on built-in open shelving at the child's height or by movable, open, child-scale shelving units. The design must support a balance of the following activities:

- Indoor and outdoor.
- Quiet and active.
- Individual and group.
- Large and small motor activity.
- Child and staff initiated.

Curriculum features include unencumbered wall space at the child's level to promote interesting center arrangements and wall display. There is also a need for flexible space and easily changeable furniture arrangement.

4.1.3 Staff-Parent Interaction:

GOAL: Parents are well informed about the program, and welcomed as observers and contributors to the program.

The center must provide adequate areas for private consultation between teachers and parents. A reception area for check-in must also be provided. Space in the classroom must be adequate to accommodate parent visits. Bulletin boards for parent notices, mail drops near the main entrance, and newsletters should be available for communications between the center and parents.

4.1.4 Staff Qualifications and Development:

GOAL: The program is staffed by adults who understand child development and who recognize and provide for children's needs.

The quality of a center's design can play an important role in attracting and retaining skilled staff who spend so much of their time in classrooms. A properly designed center can improve staff attitude, reduce stress, and minimize the effort of the teachers. It can also integrate appropriate acoustical treatment and separation of active and quiet areas to reduce noise levels. The appropriate arrangement of the diapering areas to allow easy supervision makes the staff's job easier. Classroom features should be considered to reduce the effort required for teachers to perform their tasks. Conference space must be adequate to allow for staff training sessions and regular staff meetings. A separate lounge with lockable storage space for staff personal belongings provides staff members with a quiet break area. The lounge should include ample storage space for resources and equipment. It is also highly desirable to have space to prepare large materials and learning activities.

4.1.5 Administration:

GOAL: The program is efficiently and effectively administered with attention to the needs and desires of children, parents, and staff.

The placement of the director's office space should facilitate frequent contact with the children, parents, and staff. Adequate space must be available for parent orientation sessions. Adequate work space and file storage must be provided to support a center director in the performance of administrative tasks. The arrangement of office space should be studied to ensure the adequate amount of storage space and efficient placement of equipment.

4.1.6 Staffing:

GOAL: The program is sufficiently staffed to meet the needs and promote the physical, social, emotional, and cognitive development of children.

The size of classrooms must allow for the optimal supervision ratio between staff and children. Table 4.1 establishes the permissible staff-child ratios and group sizes for Federal child care centers. The center must also comply with local licensing regulations.

4.1.7 Physical Environment:

GOAL: The indoor and outdoor physical environment fosters optimal growth and development through opportunities for exploration and learning.

The physical environment supports the operational quality of a center and profoundly affects the behavior and development of children, as well as the efficient functioning and sense of well being in adult caregivers. A pleasant functional environment is bound to influence the way caregivers react to the children. Likewise, when we consider that young children do not yet talk, or do not talk with adult sophistication, we can appreciate the power of the cues the environment gives them. The ideal environment is intriguing, rich and challenging to children, but is not over-stimulating or "flashy." It is rich in subtle visual and tactile experience, incorporating natural elements to the maximum extent possible. The center must have sufficient activity space, storage, and curriculum materials for the children. Outdoor and indoor space must be provided, with both quiet and active play areas. The criteria set forth by the NAEYC in this category are embodied in the standards of the Guide.

4.1.8 Health and Safety:

GOAL: The health and safety of children and adults are protected and enhanced.

The center's design must comply with the requirements of the latest edition of GSA's Facility Standards for the Public Buildings Service. The building security assessment, available through the regional FPS, is an essential guide to security requirements for specific locations. It must also comply with Federal, state, and local codes and standards which may apply. The center design must facilitate both teacher supervision and ease of maintenance. Because centers must be cleaned much more frequently than office space, for example, design details should be considered with this in mind. Properly designed, well located toilet and hand washing facilities are essential. Lockable storage must be provided for poisonous materials in each classroom, kitchen and laundry area.

4.1.9 Nutrition and Food Service:

GOAL: The nutritional needs of children and adults are met in a manner that promotes physical, social, emotional, and cognitive development.

The center design must provide ample space for the storage and preparation of food. Space requirements will depend on whether food is catered, prepared

on site, or brought from home. In most instances, food will be prepared on site because it typically results in more affordable care. The design process should make all parties aware of the long-term costs and ramifications of catered food service.

Food service facilities must accommodate the serving of nutritious meals and maintain the quality of food. Special accommodations must be provided for infant feeding and nursing.

4.1.10 Evaluation:

GOAL: Systematic assessment of the effectiveness of the program in meeting its goals for children, parents, and staff is conducted to ensure that good quality care and education are provided and maintained.

Space must be supplied for the filing and storage of children's records, observations, case studies, etc. A staff training area, such as a conference room, should be provided.

4.2 Group Size and Staff-Child Ratio

Sufficient staff MUST be available to provide frequent personal contact, meaningful learning activities, supervision, and physical care. A limited group size and a limited ratio of children to staff are critical for program success. Group sizes should be small so children receive personal attention and do not feel overwhelmed. The ratio of staff to child will vary depending upon:

- Age of children.
- Type of program activity.
- Inclusion of children with special needs.
- Mixing of children of different ages (age mixing)/state and local licensing requirements.
- **Age Separation** is the grouping of children into single-age classes. This practice allows adult providers to care for children who are close in chronological age. Some of the advantages noted below for age mixing can be facilitated by placing small windows which do not encumber furniture at children's level between classrooms. Children can observe the behavior of other groups. Apart from other advantages, the effect is to expose younger children to the behavior of older children as a teaching and socialization aid. Where possible, windows at adult viewing level should be incorporated to enhance supervision.
- **Age Mixing** is the placing of children who are at least a year or more apart in chronological age into the same child care group. Groups with mixed ages of older toddlers and pre-school children may provide advantages by encouraging interaction between children of different ages. When children 2 years old and older are part of a mixed-age group, the center must adhere to the group sizes and teacher-child supervision ratios shown for those younger children on the following page.

Classroom size must be consistent with group size. See Table 4.1 for group size and required staff-child ratios.

4.3 Additional Requirements

In addition to complying with NAEYC criteria, child care centers in GSA-owned or -controlled spaces must comply with the licensing requirements of the state in which they are located. When there is conflict between criteria, the most stringent requirements will apply. Licensing requirements vary between states and are constantly being updated and modified. The user must review the requirements of the specific state at the time the center is designed.

1 ACCREDITATION CRITERIA & PROCEDURES OF THE NATIONAL ACADEMY OF EARLY CHILDHOOD PROGRAMS, Washington, D.C.: National Association for the Education of Young Children, 1991.

2 Amended from ACCREDITATION CRITERIA & PROCEDURES OF THE NATIONAL ACADEMY OF EARLY CHILDHOOD PROGRAMS, Washington, D.C.: National Association for the Education of Young Children, 1991.

Table 4.1:
Recommended Staff-Child Ratios Within Group Size*[2]

	Group Size										
Age of Children	***6***	***8***	***10***	***12***	***14***	***16***	***18***	***20***	***22***	***24***	***30***
Infants (birth-12 mos.)	1:3	1:4									
Toddlers (12-24 mos.)	1:3	1:4	1:5	1:4							
2-year-olds (24-30 mos.)		1:4	1:5	1:6							
2½-year-olds (30-36 months)			1:5	1:6	1:7						
3-year-olds					1:7	1:8	1:9	1:10			
4-year-olds						1:8	1:9	1:10			
5-year-olds						1:8	1:9	1:10			
6-to-8-year-olds (school age)								1:10	1:11	1:12	1:15
9 to 12 year olds										1:12	1:15

** Smaller group sizes and lower staff-child ratios have been found to be strong predictors of compliance with indicators of quality such as positive interactions among staff and children and developmentally appropriate curriculum. Variations in group sizes and ratios are acceptable in cases where the program demonstrates a very high level of compliance with criteria for interactions, curriculum, staff qualifications, health and safety, and physical environment.*

CHAPTER 5:
PLANNING FOR SPACE AND LOCATION

5.1	**Criteria for Center Location**	**5-1**
5.2	**GSA Child Care Center Enrollment Capacity**	**5-1**
5.3	**Space and Measurement Terms**	**5-1**
5.4	**Overall Space Requirements**	**5-2**
5.4.1	Interior	5-2
5.4.2	Exterior	5-2
5.5	**Environmental Quality**	**5-2**
5.5.1	Interior	5-2
5.5.2	Exterior	5-3
5.6	**Health and Safety**	**5-3**
5.7	**Security**	**5-3**
5.8	**Approach and Access**	**5-4**
5.9	**Historic Preservation**	**5-4**
5.10	**Children's Spaces**	**5-4**
5.10.1	Classrooms	5-4
5.10.2	Common Spaces	5-4
5.10.3	Play Yards	5-4
5.11	**Adult Spaces**	**5-5**
5.11.1	Parent Spaces	5-5
5.11.2	Staff Spaces	5-5
5.11.3	Service Spaces	5-5
5.11.4	Circulation	5-5
5.13	**Example Space Programs**	**5-5**

5

CHAPTER 5: PLANNING FOR SPACE AND LOCATION

This chapter contains criteria to be used in selecting a center location and for planning and programming the space requirements. Example space programs for different center sizes are also provided. Any variances to the mandatory requirements must be approved by the RCCC. The likelihood of the need for such a variance should be identified as soon as possible in the design process. Typically, this would be at the initial design workshop or during the Prospectus Development Study process.

The center is subject to the state and (if applicable) local child care licensing requirements. The designer and the user must review these requirements during the initial phases of design so that later redesign is avoided. When there is apparent contradiction, in consultation with the licensing authority, the standards deemed more restrictive shall apply.

5.1 Criteria for Center Location

The location of the child care center is critical to a child's safety, well being, and quality of care. Location requirements can be grouped according to the following broad categories of mandatory and recommended criteria: enrollment, space, environment, safety, security, accessibility, and historic preservation. For further detailed information on these categories, refer to Chapter 10 of this document. When a center is subject to an individual state's licensing standards which are more restrictive than the criteria listed below, the state licensing standards shall govern. Locate building within 1/2 mile of a commuter rail, light rail or subway station or 1/4 mile of 2 or more bus lines to encourage the use of alternative transportation, particularly by employees. To reduce the environmental impacts of new construction, do not develop buildings on portions of sites that meet any one of the following criteria, as described by LEED Version 2.0:

a. Prime agricultural land as defined by the Farmland Trust.
b. Land with an elevation is lower than 5 feet above the 100-year flood plane.
c. Land that provides habitat for any endangered species.
d. Within 100 feet of any wetland. Playground may be in the wetlands.
e. Land which, prior to acquisition for the project, was public park land, unless land of equal or greater value as park land is accepted in trade by the public land owner. (Park Authority projects are exempt.)

Where applicable, the Urban Redevelopment, Brownfield Redevelopment, and Reduced Site Disturbance criteria described in LEED Version 2.0 should be met.

5.2 GSA Child Care Center Enrollment Capacity

For programming purposes, a typical center should be designed to serve no fewer than 74 children because fewer than that may be financially difficult for commercial providers to sustain, and may hasten future turnover of providers. Though the typical center is approximately 74 children, there are several existing centers in the GSA system which are substantially smaller or larger than this standard. At the same time, centers should not exceed 150 children, unless they are designed as "pods" that can avoid the feeling of an overwhelming institutional impression for small children. Large centers that are not expressed as small components can engender exactly the institutional environment that GSA seeks to avoid. If a center needs to serve more than 150, approval of the RCCC is required.

5.3 Space Measurement Terms

See Glossary of Terms in Chapter 1.

5.4 Overall Space Requirements

5.4.1 Interior:

Provide approximately 8.4 m^2 OFA of interior space per child for the licensed capacity of the center. (Exclusive of corridor circulation.)

Provide 2.2 m^2-5 m^2 AFA of unrestricted space per child in the classroom depending on age (see chart 5.1). This space is exclusive of corridors, administrative space, built-in casework storage, toilets, kitchen and laundry space, and building service and support areas.

5.4.2 Exterior:

Provide a minimum of 7 m^2 of outdoor play yard per child for 50 percent of the licensed capacity of the center. The play yard space should be divided, with each outdoor area having a minimum dimension of no less than 2440 mm, and a minimum size not less than 112 m^2. At least 50 percent of the play yard area should be exposed to sunlight at any given time during hours of operation.

There is also a need for shade in the play yard. Plantings, and other shading devices should be used between 10 am and 5 pm so that 25 percent of the play yard is shaded during the summer solstice. The designer needs to submit solar declension charts to ensure that this will be the case. When play yard areas cannot be provided in compliance with this criteria, the center, with RCCC approval, must provide for access to alternate play areas for large motor skills development. This alternate area may include, but is not limited to, an open courtyard, or an outdoor space such as a nearby public park if allowed by state and local licensing requirements.

Areas of the country with particularly rainy weather, for instance, the north, must have covered or roofed areas that are a minimum of 3 meters wide for exterior play. A multiple-purpose area in the center is particularly valuable in areas of the country with inclement weather, but interior multi-purpose space should not be considered as a substitute for exterior play space. The site design should place a high priority on the protection of any existing natural environments, including the health and stability of their ecosystems. A functioning natural environment may provide a wealth of learning opportunities for children of various ages, assuming such outdoors activities are conducted with attention to the safety and well-being of children.

For Example:

- Design to a site sediment and erosion control plan that meets the following objectives, as described in LEED Version 2.0:
  - Prevent loss of soil during construction by storm water runoff and/or wind erosion, including protecting topsoil by stockpiling for reuse.
  - Prevent sedimentation of storm sewer or receiving streams and/or air pollution with dust and particulate matter.

- Implement a stormwater management plan that results in a 25% reduction (developed sites) or no net increase (undeveloped sites) in the rate or quantity of stormwater runoff, as described in LEED Version 2.0:

- Minimize the site's total contribution to the "heat island effect" (see appendix E for explanation of term) implementing as many of the following strategies as possible, as described in LEED Version 2.0:
  - Provide shade (within 5 years) on at least 30% of non-roof impervious surfaces.
  - Use light-colored/ high-albedo materials (reflectance of at least 0.3) for 30% of the site's non-roof impervious surfaces.
  - Use open-grid pavement system for a minimum of 50% of the parking lot area.
  - Use EPA Energy Star Roof compliant, high-reflectance and low-emissivity roofing.
  - Install a "green" (vegetated) roof for at least 50% of the roof area.

- Minimize light pollution from exterior lighting, as described in LEED Version 2.0. See section 10.11 for specific technical requirements. See Chapter 6 for a full discussion of parking requirements.

5.5 Environmental Quality

5.5.1 Interior:

- Natural lighting is essential in child care centers. It is the hallmark of nurturing, quality environments for children. Child care centers must have access to generous amounts of natural light. Natural light should be the primary means of lighting the classroom space. At a minimum, natural lighting throughout would be the ideal. Locations without any access to natural light should not be used for new child care centers. The absence of natural light may be a prime consideration when contemplating a relocation of an existing center. The designer should strive

to ensure that classroom space faces south if possible, so that the maximum amount and warmth of light is available to the children during their day. Classrooms without windows MUST have full spectrum, indirect lighting as per Chapter 10 of this Guide and must have a variety of light sources.

- When locating a center within an existing building, in no case should classrooms have a window to the exterior area less than 8 percent of the floor area. Artificial light cannot substitute for the quality of natural light. If artificial lighting is needed to enhance natural lighting, it should include a variety of fixture and lighting types with high color rendition. See Chapter 10 for artificial light requirements.
- The designer should strive to have natural lighting coming from at least two directions. Window seats also are an effective way to maximize the effects of natural light.
- The daylighting strategy used in the building design should be carefully studied, including analogue, physical modeling (at 3/4" scale), or digital modeling where appropriate, to achieve the technical requirements listed in section 10.7
- Design for good indoor air quality using low- or non-toxic finishes (see section 9.1) and using acceptable ventilation levels and system design (see section 10.9.2). Furthermore, studies suggest that the use of many types of indoor plants may improve indoor air quality by filtering pollutants out of the air. Certainly, indoor plants contribute to creating a more “home-like” atmosphere, and have been shown to positively affect the behavior and mental well-being of both adults and children, which is the subject of LEED Commercial Interior credit item currently under development.

5.5.2 Exterior:

- Acoustical measures are necessary as discussed in Chapter 10. The center should not be located near noise sources such as major highways, street intersections, railroad lines, or airport flight paths without mitigation. If proximity to high levels of noise is unavoidable, acoustical measures are necessary as discussed in Chapter 10 in order for the RCCC to approve the site.
- Maximum acceptable noise levels are dependent upon the area of the center subjected to the noise and whether the sound is continuous or intermittent. Children, and especially infants, are sensitive to noise particularly unexpected or intermittent loud noise. See Chapter 10 for guidelines on maximum acceptable noise levels.
- The center must not be exposed to fumes or dust emissions from industrial enterprises and operations, transportation vehicles, furnace and incinerator exhaust, mists from cooling towers, or other similar sources. Avoid placing centers near exhausts from food processing, waste handling operations, loading docks, or similar sources of unpleasant odors.
- Locate the center at a site with desirable natural features, such as trees, south facing slopes, and views of natural and pleasant man-made features or interesting urban vistas.
- Locate the center adjacent to other Federal employee services in the building for convenience of the parents, provided that the location is deemed secure from threats.
- Consider the microclimate when choosing a center location, including wind patterns and solar angles. The selected location should allow outdoor play yard orientation appropriate for local climatic conditions.
- Consider proposed major future construction projects within the building and adjacent to the site. If possible, avoid these locations due to extended disruptive high noise levels and poor air quality.

5.6 Health and Safety

The building structure must comply with area limitations, mixed-use separation, and construction requirements in PBS-100 and other Federal, state, or local codes and standards which apply.

- The location must allow for the safe arrival and departure of children.
- The location must be free of hazards including fountains, wells, open pools, unprotected edges, drop-offs and cliffs, and dangerous equipment. Play areas must not have open drainage ditches or openings to storm sewer systems. The center location must minimize exposure to sources of Legionella Pneumophilia.
- The location must be free of rodents, hazardous insects, vermin, and toxic plants.

5.7 Security

- The location must meet requirements established by the GSA Building Security Assessment which is available through GSA’s Federal Protective Service (FPS). Refer to the most recent FPS directives.
- The center location must be readily identifiable and accessible to emergency response personnel.
- If the FPS security assessment indicates the need for immediate access to building security guards or FPO’s, they must be provided. The means of assistance in case of emergency must also be accommodated.

- The location must allow for all exits and entrances to be secured. Normally, movement should be restricted through one main entrance and perhaps an additional service entry. Where possible, maximum visibility of entry points from inside the center should be provided.
- The location must be a defensible space with a secure perimeter and controlled access.
- The security assessment may recommend the center entrance be separate from the main building entrance in order to reduce congestion and to address security considerations.
- The security assessment may recommend that a guard station should be located near the center so that surveillance of comings and goings to the center are easily seen by posted guards. Alternatively, a form of surveillance will be provided.

5.8 Approach and Access

If possible, the center location should be within walking distance of public transportation. Ensure that bicyclists and persons using mass transit also have safe approaches to the building and do not endanger child or adult pedestrians.

The center location should be within walking distance of the work place and Federal transportation.

5.9 Historic Preservation

The decision to locate a center in a National Historic Building must take into consideration the historic preservation requirements outlined in the latest edition of GSA's Facility Standards for the Public Buildings Service. If located in a historic building, the GSA Region's office responsible for historic preservation must be contacted and made a part of the process at an early stage of planning the center. Play yard location is also a vital consideration in assessing the effect of the center location on historic structures or neighborhoods.

5.10 Children's Spaces

5.10.1 Classrooms:

A classroom is the architecturally defined area that contains each group of children and their teacher(s). Classrooms may be separated by full partitions or partial barriers that allow controlled visual or acoustical connections to other groups. However, at least one interior viewing panel, at children's height, is required both adjacent to corridors and between classrooms where possible. The classrooms themselves should be as open as possible, allowing supervision and the penetration of natural light. The classroom contains the required spaces for all recommended activities, as well as spaces for personal care. It should be flexible enough to support variable demographics of the clientele as well as to allow program adjustments to serve fluctuating demand for child care services. Adequate space is also necessary for storing children's and teacher's personal items, curriculum materials, supplies, and equipment. Space should conform to NAEYC accreditation and local licensing requirements.

5.10.2 Common Spaces:

Spaces shared by more than one group are included in this category. The designer needs to be cognizant that the child may spend very few hours of the day in his or her home. The center becomes the "home away from home" for the child . The design should convey this impression. A common area that "feels" like the core of the center is an excellent organizing concept and one which will dispel an institutional feeling, especially if it is treated in a "home-like" way. This may be simply an area of the circulation that provides a stopping place that allows social interaction. However, it should not be the multi-purpose room. Circulation through the multi-purpose room has proved to be an undesirable design feature.

Other common areas may consist of one or more of the following: multiple-purpose area, large motor activity area, meeting/gathering area, and a separate sick bay (if the latter is required to meet local licensing requirements).

5.10.3 Play Yards:

Play yards are outdoor extensions of the classrooms, providing many of the same opportunities as indoor spaces. Play yards should provide for a variety of developmentally appropriate activities and include storage for curriculum equipment as well as wheeled toys, trikes and wagons. Spending time on the playground is undoubtedly the preferred activity of children. Therefore, to the greatest extent possible, the designer should arrange ease of access to the play yard from the classroom and maximum adult supervision.

5.11 Adult Spaces

5.11.1 Parent Spaces:
Spaces within the center that are used by parents include the entry, reception/"living room" area, conference room, and the classroom (for observing, visiting, conferring with teachers, and feeding infants). Parents should have direct access to a staff toilet room. A lactation area should offer privacy for nursing mothers, preferably near the nap area. This need not be an enclosed room, or even a partitioned area.

5.11.2 Staff Spaces:
The spaces used by teachers and directors are the staff resource room, the classroom and play yard areas, the entry and reception areas, offices, conference and lounge, resource storage, and adult toilets.

5.11.3 Service Spaces:
The spaces allocated for service and support to the center include the kitchen and food storage, laundry, janitor's closet, as well as the electrical/ mechanical and telephone service equipment room.

5.11.4 Circulation:
This term applies to the space dedicated to major pathways which connect all the interior spaces.

5.13 Example Space Programs

The following table provides an example of a space program for a 74-child center. This population is based upon workable child/staff ratios which also tends to be economically sustainable. While this is the typical sized center, others, such as 94 and 148, are possible with correct staff ratio and group size. Requirements are stated in AFA and OFA per child to allow the user to modify the program to the actual enrollment capacity anticipated for specific projects. The combination of groups for an actual project may vary from those used in these examples, depending upon the needs of the proposed center. No classroom should provide less than 4.5 sq. meters per child of activity space within the classroom, with the exception of infants, which should not be less then 4.875 sq. meters because much of their "Activity" time is spent sleeping. At more then 148 children, consider making a two pod arrangement so the center maintains its small scale feeling for the child.

Table 5.1: Example Classroom Space Requirements

Note: See Appendix A for guidance on metric conversion.

Space Title	Unit Size AFA	Unit Size	Total
	AFA/Child	OFA	OFA
Infant Areas			
Classroom of 8 Infants			
Activity Area	2.20 m²	+25%	23.0 m²
Support Areas			
Cubby Storage	0.43 m²	+25%	4.6 m²
Food Preparation	0.43 m²	3.5 m²	3.5 m²
Eating/Table Area	0.57 m²	4.6 m²	4.6 m²
Nursing	0.22 m²	1.8 m²	1.8 m²
Sleeping	2.52 m²	+25%	26.9 m²
Diapering Station and Storage	0.45 m²	3.6 m²	3.6 m²
Adult Toilet	0.72 m²	5.8 m²	5.8 m²
Storage	0.17 m²	+25%	1.8 m²
Sub-Totals for Infant Areas	9.45 m² OFA/Child		75.6 m²
Younger Toddler Areas			
Classroom of 12 Younger Toddlers			
Activity Area	3.80 m²	+25%	57.0 m²
Support Areas			
Cubby Storage	0.52 m²	+25%	8.4 m²
Food Preparation	0.28 m²	3.4 m²	3.4 m²
Napping	0.41 m²	4.9 m²	4.9 m²
Hand washing Sink (2 Sinks)	0.19 m²	2.3 m²	2.3 m²
Toddler Toilet (2 Toilets)	0.31 m²	3.8 m²	3.8 m²
Diapering Station and Storage	0.38 m²	4.6 m²	4.6 m²
Storage	0.30 m²		3.6 m²
Sub-Totals for Younger Toddler Areas	7.3 m² OFA/Child		88.0 m²

Space Title	Unit Size AFA	Unit Size	Total
	AFA/Child	OFA	OFA
Older Toddler Areas			
Classroom of 14 Older Toddlers			
Activity Area	4.0 m²	+25%	70.0 m²
Support Areas			
Cubby Storage	0.53 m²	+25%	9.8 m²
Children's Art Sink	0.16 m²	2.2 m²	2.2 m²
Children's Handwashing Sink (2 Sinks)	0.25 m²	3.5 m²	3.5 m²
Children's Toilet (2 Toilets)	0.39 m²	5.6 m²	5.5 m²
Diapering Station and Storage	0.33 m²	4.6 m²	4.6 m²
Storage	0.18 m²	+25%	3.4 m²
Sub-Totals for Older Toddler Areas	4.95 m² OFA/Child		99.0 m²
Pre-School Areas			
Classroom of 20 Pre-School Children			
Activity Area	4.4 m²	+25%	110 m²
Support Areas			
Cubby Storage	0.53 m²	+25%	14 m²
Children's Art Sink	0.20 m²	4.0 m²	4.0 m²
Children's Handwashing Sink (2 Sinks)	0.25 m²	5.0 m²	5.0 m²
Children's Toilet (2 Toilets)	0.40 m²	8.0 m²	8.0 m²
Storage	0.18 m²	+25%	4.5 m²
Sub-Totals for Pre-School Areas	7.28 m² OFA/Child		145.5 m²
After-School Areas			
Classroom of 20 After-School Children			
Activity Area	5.0 m²	+25%	125 m²
Support Areas			
Lockers	0.47 m²	+25%	12.0 m²
Children's Art Sink	0.16 m²	3.2 m²	3.2 m²
Boys Toilet with Sinks	0.30 m²	6.0 m²	6.0 m²
Girls Toilet with Sinks	0.32 m²	6.0 m²	6.0 m²
Storage	0.27 m²	+25%	7.0 m²
Sub-Totals for After-School Areas	7.96 m² OFA/Child		159.2 m²

Table 5.2: Example Space Program (74 Children)

Pro-rate the following totals to reflect different center populations.

Note: See Appendix A for guidance on metric conversion.

Space Title	*Total OFA*
Staff and Parent Areas	**Occupiable Floor Area**
Public Area	
Reception	8.3 m^2
Staff Area	
Director's Office	14.0 m^2
Sick Bay (If Required)	*2.0 m^{2*}*
Staff Lounge/Work	14.0 m^2
Parent/Staff Conference	*13.0 m^{2*}*
Adult Toilet	5.8 m^2
Central Storage	10.0 m^2
Sub-Totals for Staff and Parent Areas with option	67.1 m^2
Service Areas	
Laundry	5.0 m^2
Warming/Central Kitchen	25.0 m^2
Janitor's Closet	3.2 m^2
Telephone Closet	.93 m^2
Sub-Totals for Service Areas	34.1 m^2
Common Spaces	
Multi-purpose/Large Motor Activity Room, optional, but required in areas of the country with more than 915 mm of annual precipitation or temperatures below -4 degrees Celsius as a normal January daytime high temperature. Room should be sized for 20 children minimum.	*65.0 m^{2*}*
Porch for all-weather exterior play (covered porch should be 60m^2 in area but is counted as 30m^2 of interior space)	*30.0 m^{2*}*
Play yard storage (10m^2 of space but counted as half)	5.0 m^*
Sub-Totals for Common Spaces with all Options (excluding play yard storage)	100.0 m^2

Classrooms	
Infant Areas	
Classroom of 8 Infants	75.6 m^2
Young Toddler Areas	
Classroom of 12 Younger Toddlers	88.0 m^2
Older Toddler Areas	
Classroom of 14 Older Toddlers	99.0 m^2
Pre-School Areas	
Classroom of 20 Pre-School Children	145.5 m^2
Classroom of 20 Pre-School Children	145.5 m^2
Sub-Totals for Classroom Spaces	553.6 m^2
Total Center OFA without any Options	559.2 m^{2*}
Total Center OFA with multi-purpose room option	624.2 m^{2*}
Total Center OFA with multi-purpose room and porch options	654.2 m^2

NOTE:

1. Add an additional 15%-20% to the totals above (depending on building layout) for total interior area including circulation outside classrooms.

2. For free-standing buildings, multiply the result of note 1 above by 5% to include exterior walls.

*** Optional**

CHAPTER 6:
SITE DESIGN

6.1	**Concepts for Site Design**	**6-1**
	6.1.1 Context	6-1
6.2	**Entry & Circulation**	**6-1**
	6.2.1 Entry Approach	6-1
	6.2.2 Parking	6-1
	6.2.3 Services	6-2
	6.2.4 Security	6-2
6.3	**Concepts for Play Yard Design**	**6-3**
6.4	**General Design Concept**	**6-3**
	6.4.1 Location	6-4
	6.4.2 Separation	6-4
	6.4.3 Transitions	6-4
	6.4.4 Porches	6-4
	6.4.5 Shade	6-4
	6.4.6 Circulation	6-4
	6.4.7 Site Furniture	6-4
	6.4.8 Storage	6-5
6.5	**Types of Outdoor Play Areas**	**6-5**
	6.5.1 Sand and Water Play	6-5
	6.5.2 Dramatic Play	6-5
	6.5.3 Large Motor Play	6-5
6.6	**Play Yard for Diffrent Age Groups**	**6-6**
	6.6.1 Infant Outdoor Play Areas	6-6
	6.6.2 Toddler Outdoor Play Areas	6-6
	6.6.3 Pre-School Outdoor Play Areas	6-7
	6.6.4 School-Age Outdoor Play Areas	6-7
6.7	**Specific Site Technical Criteria**	**6-7**
	6.7.1 Fences and Enclosures	6-7
	6.7.2 Plant Materials	6-8
	6.7.3 Dimensions and Clearances	6-8
	6.7.4 Shading	6-9
	6.7.5 Play Yard Surfaces	6-9
	6.7.6 Resilient Surfaces	6-9
	6.7.7 Hard Surfaces	6-10
	6.7.8 Grass/Turf Surfaces	6-10

6

CHAPTER 6: SITE DESIGN

This chapter provides concepts and criteria for site design and design of the play yards. It identifies the general types of outdoor areas required, discusses the relationships of these areas to other outdoor and indoor spaces, and provides detailed criteria for materials, features, furnishings, and equipment required in these spaces.

6.1 Concepts for Site Design

The conceptual site design for child care centers must be integrated into the design of the overall site, including vehicular and pedestrian movement, parking, entry, service points, and constructed or landscape features. In designing the total site, particularly for new construction, reduce the development footprint.

The site must be designed according to general site design principles contained in the latest edition of GSA's Facility Standards for the Public Buildings Service including orientation, grading and landscape form, aesthetics, construction, plant material selection, lighting, signage, and amenities. Before the site for the center and its playground are selected, the soil must be tested for the presence of dangerous contaminants such as lead and PCB's. Coordinate with, and follow the direction of the GSA regional environmental safety personnel to ensure that the site is environmentally safe for children. The site should continue to be monitored, as per the direction of the environmental safety staff, to ensure that it does not become subsequently contaminated, especially by lead. This is particularly a concern in urban areas or where there is a heavy concentration of automobiles or industrial facilities. Also proposed playground locations adjacent to old structures which may be painted with lead paint or contain other hazards should be investigated.

Five conceptual areas of site design relating to child care centers include: a) Entry and Circulation; b) Parking; c) Service; d) Safety and security; and e) Play Yards.

6.1.1 Context:

It is paramount to considering the context in which the center and its associated play yard are located. The designer must realize that the building is rarely an object alone. Rather, the primary objective of the site and exterior design should be to enhance the existing context. This is an essential good neighbor action for the Federal Government. This aspect of the design must be addressed at the concept level.

6.2 Entry & Circulation

6.2.1 Entry Approach:

The Center's design should incorporate a point of reference or landmark that serves as a welcome and a transition. The center entrance should be separated from the main entrances to the building and to service areas, if possible. This may be a requirement of the FPS security assessment and should be coordinated at the beginning of the design process.

A transition, such as a porch, is desirable at the main entry. This could be combined with a covered walkway to connect with short-term parking, for protection from inclement weather.

In cold climates, there must be a canopy (or a recess) at required egress doors to ensure that doors can completely open without obstruction from snow and ice.

Drop-off areas must be arranged so that an adult can remove a child from the pedestrian side and proceed directly to the center without crossing traffic or crossing in front of or behind vehicles.

6.2.2 Parking:

Short-term parking should be provided for parents bringing their children to the center. There must be accommodation for the disabled to park in this area. A sufficient number of parking spaces are needed to allow parents time for brief conversations with teachers while they are in the center (see formula on next page). Short-term parking for the center should be separated from other tenant parking and located as close to the center as possible. However, its location must also be consistent with security as defined by the FPS security assessment of the site.

The arrangement should minimize the risk to pedestrians and allow safe flow of vehicles through the area. The parking should never be arranged in a way that forces children or persons in wheelchairs to proceed behind parked cars. Such an arrangement may mean that a driver is unable to see such pedestrians when backing up. Walkways in front of vehicles must be protected by tire guards, bollards or some other means to prevent any portion of a vehicle from advancing into the walkway zones. Locate the parking away from busy intersections or vehicle circulation routes.

For emergency purposes, at least one parking space, typically for the center director's use must be provided as near to the center entrance as possible. If Federal employee parking is provided at the building, allow one parking space for each child care center employee for every ten children of center capacity. Disabled employees must be accommodated with a properly sized parking space(s) as near to the center as possible.

As the site configuration and location allow, the employee parking spaces should be located as near to the center as possible for safety and ease of access. (It should be noted that, in winter months particularly, staff members may be required to leave the center after dark, when most other employees will have already left the premises.) Ideally, an unobstructed line of sight should be provided between the interior of the center director's office through the center entrance and into the short term parking. At a minimum, two permanent parking spaces will be assigned to the child care center. Note that in rare cases, permanent parking will not be available. If two permanent spaces cannot be provided, approval must be obtained from the RCCC to waive the requirement. This does not change the need for identifying reserved parking spaces as near to the center as possible for short-term parking for parents.

Parents are required to physically bring their child(ren) into the center to "sign in," and to pick up their child(ren) inside the center and "sign out." The reverse is true in the evening. The center usually opens at 6:30 AM and fills on a bell curve that peaks around 10 AM when the building will be at maximum preschool/infant/toddler capacity. Staff will arrive for work only as an increased number of children fill the building. In the evening, teachers will remain only as long as necessary to maintain the required staff to child ratio. A completely full building will be extremely rare due to illnesses or family vacations. In addition, many of the children in the facility will have a sibling enrolled at the center, further reducing auto traffic. The average time for loading and unloading (parking time) is seven minutes. In the absence of actual data, the following formula may be used:

Formula: *Full capacity x .7 / 8.57 = minimum number of drop off spaces*

Additional parking should include spaces for staff vans and handicapped. Staff parking should be provided for 80% of employees required at peak capacity. Accessible parking spaces may be considered as staff or drop off spaces.

The employee parking area should be designed to minimize dependence on conventional automobiles, by maximizing the following strategies enumerated in the LEED Version 2.0 Credit on Alternative Transportation:

- Size parking capacity not to exceed minimum local zoning requirements.
- Add no new parking for rehabilitation projects.
- Provide preferred parking for carpools or van pools capable of serving 5% of the building occupants.
- Provide suitable means for securing bicycles, for 5% or more of building occupants.
- Consider also the installation of alternative-fuel refueling station(s) for 3% of the total vehicle parking capacity of the site. This may be feasible if combined with the fueling needs of a larger campus.

As in any other work place, staff may chose to travel to work by a number of means. Other features to assist those choosing to commute via bicycle (secure bicycle parking), public transportation (close and safe passage to bus or metro stops), or carpool (designated preferred parking spaces) must be provided to serve at least 5% of the adult building occupants.

6.2.3 Service:

Service access to a center will typically make use of the main building dock space and service access if the main building provides these areas. In a stand-alone center, a dock is not necessary. Service access for sanitation removal, food and supply delivery, if these are not provided by the main building, should be separated from short-term and staff parking. Likewise, a sanitation dumpster with screening may be necessary if this service is not provided by the main building. One service parking space is desirable to avoid conflicts in deliveries if possible in the context where the center is located. The ventilation system design should ensure that emissions from vehicles at the service entry are isolated from the indoor air of the occupied space of the child care center.

6.2.4 Security:

A prime area of concern in the establishment of a child care center is security. The design team must coordinate with local representatives of GSA's Fed-

eral Protective Service about its recommendations at the earliest stages of planning and design. These early security decisions are critical and the RCCC must be included in these discussions.

The center should be separated from public areas by buffer zones and barriers, such as fences or screens, particularly in high-security-risk areas. The designer may create buffer zones with open turf areas, or with rows of trees, perimeter hedges, or berms, or any combination of these. Buffer zones are useful because they offer the center staff the time to observe individuals as they approach the center through the buffer zone. In addition, they help shield children from unwanted wind, noise, and other disruptions. The center location and local conditions may necessitate the use of fences and screens to block views from outside the center. These must be sensitively designed to enhance the way the center relates to its context.

6.3 Concepts for Play Yard Design

The activity spaces provided for children in play yards are largely determined by the initial landscape architectural features incorporated into the play yard. Individual play areas within the overall play yard should offer a range of developmentally appropriate activities for social, emotional, intellectual, and physical development. All play areas must be designed according to the guidelines set forth in the most recent publication of the Handbook for Public Playground Safety by the U.S. Consumer Product Safety Commission. In addition play areas must comply with:

- The latest ASTM F1487-01-F15.29 Standard Consumer Safety Performance Specifications for Playground Equipment for Public Use
- The latest ASTM F1292-99 Standard Specification for Impact Attenuation of Surface Systems under and around playground equipment
- The latest ASTM F1951-99 Standard Specification for the determination of accessibility of surface systems under and around playground equipment
- The latest ASTM F2049-00 Guide for Fences/Barriers for Public, Commercial and Multi-Family Residential Use Outdoor Play Areas;
- 36 CFR Part 1191 The Americans with Disabilities Act (ADA);
- Architectural and Barrier Compliance - latest of all applicable Sections;
- Uniform Federal Accessibility Guidelines (UFAS) for General Services Administration
- American Academy of Public Health Association Academy of Pediatrics-Caring for our Children/Out of Home Child Care Programs 2002; and
- The latest NAEYC Requirements.

Play yards should serve as extensions of classroom spaces, especially where temperate climate allows an easy flow of children and staff into the exterior space on a regular basis. Play yards should be integrated, to the greatest extent possible, into the overall design of the center. Within a central play yard, separate play areas are recommended for each age group of children.

Some states require a separate fenced play yard for infants and toddlers. Even without such complete separation, individual play areas within the overall play yard can be developed to serve each of the following age classifications if provided by the center:

- Infants
- Toddlers
- Pre-school
- School-age

Within the play areas, spaces should be developed to support and promote each of the following activity types:

- Sand/Water Play
- Dramatic Play
- Large Motor Play (Climbing / Wheeled Toys)

In addition, equipment storage which is directly accessible from the play yard must be provided. Walk-off mats at every entry point from the play yard to the building must be provided.

6.4 General Design Concept

Areas within the play yards should be zoned by activity type, age group, and landscape character. Play areas for infants and toddlers must be physically separated from play areas for older children while retaining some visual tie. Typically, fencing with no sharp edges is to be used to separate the play areas. It should terminate 1000 mm above the ground and below any portion of it should be visually compatible with the perimeter fence or wall. The tops of fencing and spacing of pickets must present no hazard to children or adults. Picket spacing can be no more then 3.5 inches apart.

Tops of fence pickets must terminate at a horizontal member to protect against puncturing hazards. No horizontal elements that could be used as a ladder are to be included in the design of the fence. Walls adjacent to playgrounds must also not be able to be used for climbing so that children could leave the center or injure themselves in a fall.

6.4.1 Location:

Activity areas within the play yard should be placed near an element that can be used as a point of reference by both children and teachers as they move throughout the different play areas. Entrance points, transition and staging areas, storage facilities, seating areas, overhead structures, trees, gathering areas, and larger play structures may all function as points of reference or landmarks within the play yard.

6.4.2 Separation:

Specific play areas may be defined by several elements. Elements include circulation paths, barriers, screens, structures, play equipment, plantings, landscape forms, grade changes, and open buffer areas. Separation of one play area from another should be subtle, leaving some visual, audible, and physical connections intact. Infant/toddler play yards must have a physical separation from preschoolers, for instance, a 915 mm high, non-wood, non-climbable fence with rounded corners and without splinters would be an appropriate delineation.

6.4.3 Transitions:

The link between interior and exterior spaces may be a transitional area such as a deck or open vestibule. Transitional areas allow for a blend of interior and exterior environments, and can function as a point of departure or staging area for play yard excursions.

6.4.4 Porches and Decks:

These are desirable elements, particularly in areas which have weather that can be problematic for outdoor play, such as the northwest with its abundant rainfall, or the Great Lakes Region with its abundant snow. In the south and west, however, shaded decks are also very appropriate. Porches easily lend themselves to nurturing activities and can be valuable for use on days when the weather will not permit full use of the play yard.

In areas with moderate temperatures for much of the year, such as Southern California, porches can be used as activity areas for virtually the entire year. Porches are the architectural symbol par excellence of a nurturing environment and provide a transition to the natural elements which children often miss. They are also substantially less expensive than interior, conditioned space. If west facing glass is required, a connected covered porch at least 2400 mm wide will significantly reduce the air conditioning load and comfort level in the center.

6.4.5 Shade:

Provide shaded areas in play yards which should shade at least 25% of the play yard at noon on the Summer Solstice (June 21). At play yard concept level the A/E must show that this will be the case. The following solar declension website can be of use.
http://www.usc.edu/dept/architecture/mbs/tools/vrsolar/index.html

6.4.6 Circulation:

Circulation within the play yard should branch throughout the various play areas. Dedicated pathways and routes should be provided for play with wheeled toys. These paths need to be a minimum of 1525 mm wide so that two tricycles can pass each other. The circulation pathway is the primary element that can tie the entire play yard together. Ideally the play yard must have a minimum of two access points, one from the classroom into the play yard, and one from the play yard outside to the site. The access point from the play yard to the site beyond must allow the retrieval of play equipment (balls, etc.). The design must accommodate the movement of maintenance equipment into the play yard, and allow an emergency exit. All access points to the play yard must be controlled and readily visible for security purposes. The design of the play yard should accommodate the movement of disabled children and adults through the play yard to the play events.

6.4.7 Site Furniture:

Provide seating in a shaded area with views to other areas of the play yard. Children and teachers may sit and observe the activities of the play yard. Children may talk with each other or with their teachers in a relaxed fashion or perhaps have a story read to them by the teacher. Tables and chairs, a bench, or a picnic table may be furnished, allowing children, and occasionally parents, to eat their lunch or snack, or to occupy themselves with drawing and other activities. Easels for open air painting are very desirable and help to “soften” the feeling of centers whose surroundings may not easily promote the impression of a natural environment. Provide adequate approach and fall zones for equipment and furniture, as prescribed by the

current edition of *Handbook for Public Playground Safety*, issued by the Consumer Product Safety Commission and conforming to the other documents cited in 6.3.

No treated wood materials are to be used on the play yard. No wood treated with pentachlorophenol or creosote should be used anywhere on the site. Instead, maximize the use of products made from recycled plastic or recycled plastic/wood composite materials, which are inherently durable and weather-resistant, for benches, etc. Following EPA's Comprehensive Procurement Guidelines (CPG), playground equipment should be made from a structural grade material containing a minimum of 95% post-consumer High Density Polyithylene plastic (i.e., milk jugs). The remaining 5% should consist of resins and fibers for strength, and the same color should be throughout the product. The product also needs to include UV inhibitors for longevity.

6.4.8 Storage:

Storage facilities should be easily discernible and have a unique, easily understood symbol indicating the contents. Storage facilities provide an opportunity for children to learn organization and cooperation skills. Children acquire a sense of responsibility by learning to return toys and tools, under the direction of the caregiver, to the correct storage areas when they are finished playing.

There must be visibility and ventilation into the storage area. Exterior storage must be equipped with locks that operate at the exterior of the door but will not allow children to be trapped inside the structure.

6.5 Types of Outdoor Play Areas

6.5.1 Sand and Water Play:

Sand and water play facilities allow children to pretend and project their ideas in a real and physical way. These facilities enhance children's abilities for make believe play, and to further develop social skills and must be accessible to all children. Sand and water tables should have play surfaces at children's height, allowing them to dip out a portion of sand or water onto a stable surface. Allow play space and storage for props such as spoons, shovels, pails, plastic vehicles and animals, containers, and buckets. These props add greatly to the quality of play experiences. The need for a child scaled drinking fountain on the playground should be determined during design. In particularly warm areas, there will be a greater need for water fountains. In addition, provide a hose bib connection for water play and for filling wading pools, accessible from the circulation path. Metal water fountains require shade as they can become quite hot in full sun locations and children could be burned. It is also desirable to emphasize the source of the water, making it a design "event," a symbolically important part of the play yard.

6.5.2 Dramatic Play:

Dramatic play is the most dynamic activity in the play yard, often using many different areas of the play yard as stage settings. Ample opportunities should be provided, allowing children to engage in role playing and make believe activities. Playhouse structures should have seating. Adequate play areas and storage should be provided to allow use of a wide variety of props. These items include elements such as boards, scrap lumber, dress-up clothes, cooking utensils, tarpaulin, banners, signs, and other items that help ensure the high quality of dramatic play. The props should be easily moved and incorporated into play activities. The dramatic play area should be adjacent to and incorporate paths and parking areas for wheeled toys. Change of level greatly enhances the quality of dramatic play as it allows for a "king of the mountain" experience which is a universally popular theme in children's play.

6.5.3 Large Motor Play:

Large motor play areas provide for the physical development of children. These areas should offer opportunities for climbing and riding wheeled toys, as well as running, jumping, sliding, and balancing. Fixed equipment such as a superstructure play piece and slides encourage children to explore the limits of their physical abilities through varying levels of difficulty and challenge. Berms that create small hills also provide challenge, and are cost effective. They also provide visual interest and can help add a needed connection to nature.

The degree of difficulty, challenge, or risk must be obvious to children involved in any given activity. Recognizable challenge or risk is good, but hidden or unforeseen risk is dangerous and often results in injuries. For this reason, the play yard should not contain metal slides (which can burn children when they become hot), enclosed tunnel slides (which make observation difficult and can allow one climbing child above the enclosed tunnel to fall on top of another at the tunnel exit), traditional see-saws (which

can result in injuries when one child unexpectedly jumps off of it), or spring toys (which can severly harm a child as he or she walks by the relatively heavy, moving toy).

Small berms and hills, large rocks, stumps, trees or bushes provide settings and obstacles for children to climb over, jump on, dodge around, or hide behind. All of these present desirable challenges. Playing with wheeled toys, such as tricycles and wagons, helps to develop coordination and physical strength. The large space required for these activities and the boisterous character of this play dictate that this area be situated away from quieter ones. Because local licensing has a wide range of interpretation of appropriate play yard design, obtaining their "buy-in" to the design concept as soon as possible is very important.

Play areas should be made accessible to children with disabilities. The proposed rules are quite complex and the designer should consult with playground equipment manufacturers and refer to the web site: www.access-board.gov/

To provide a safe environment that still allows gross motor activity, the movement of the children themselves rather than equipment is key. In addition, the following elements are not to be used in GSA play yards as they have been found to be unsafe in the group care setting:

- Metal slides
- Enclosed tunnel slides
- Traditional seesaws
- Spring mounted, rocking toys with very heavy animal seats which can strike a child (There are acceptable, lighter weight rocking toy alternatives).
- Swings, other than tire swings

6.6 Play Yards for Different Age Groups

6.6.1 Infant Outdoor Play Areas:

Play areas for infants require special design considerations. Separate spaces for infants should be near toddler play areas, providing visual and audible connections and limited physical contact. Ideally, infant play areas should be exposed to the natural environment, though shielded from the extremes of wind and sun.

Infant play area surfaces should consist of soft, resilient materials that protect crawling children and provide a comfortable surface on which they can sit. Soft surfaces should have different textures and (not garish) colors denoting changes in activities and challenges. Developmentally appropriate challenges should be situated within bounded areas or behind slight barriers requiring mastery before the child may venture into the next area. These challenges could take the form of crawling spaces with slight inclines or undulations, low, easy to cross barriers or berms, pull up bars, and low platforms and slides. There must be some surface that is hard enough to allow the use of wheeled and push toys.

6.6.2 Toddler Outdoor Play Areas:

Toddlers should have play areas for walking, jumping, climbing, running, drawing, painting, block play, group play, sorting, and exploring. The toddler play environment should allow for a wide range of movement and stimulate the senses through the novelty and variety of challenges. Simple, versatile climbing equipment is more appropriate for toddlers than scaled down versions of older children's play structures. Toddlers crave and enjoy semi-enclosed spaces such as small play houses or climb-through tunnels. Other favorite play equipment for toddlers includes small slides. Toddlers seek out experiences with motion or movement. All play structures in toddler areas must be surrounded by a resilient surface. A variety of surfaces and materials should be provided including sand and dirt, pavement, and open grassy areas where toddlers can use an abundance of play objects. When combined with toys, sand becomes a major resource for toddler play. There must be hard surface areas and paths that support wheeled toy play. All sand areas require fitted water-permeable covers to deter rodents and other pests.

6.6.3 Pre-School Outdoor Play Areas:

Play areas for pre-school children should support dramatic and constructive/ creative play, active and quiet play, sand and water play, with opportunities to explore nature. Pre-school children regularly interact, socialize, discuss, and negotiate. At this age, they begin to engage in socio-dramatic play. Running, jumping, climbing, and swinging are all important activities, but are often pursued in the context of a make believe setting. A larger, open-ended play superstructure offering many activities should be provided, but be designed to lend itself to dramatic play. There should be elements such as playhouses, stages, and props that encourage dramatic play. These elements should be positioned within the play area to allow the dramatic play to spill out and flow into other spaces. Pathways for wheeled toys also provide circulation and allow the play experience to flow through the play areas. Where these are not safety surfaces, a minimum of 10mm of impact resistant topping must be applied over concrete. Safety helmets should be required on hard surfaces. Facilities for play with sand and water should be included and placed adjacent to one another allowing these activities to intermingle. Materials for creative play activities such as musical devices, painting materials, chalkboards, construction materials, and blocks also should be included. If there is a covered porch area, it is ideal for painting, drawing, etc. Generally, for best motor activity in a group care setting, the children should be moving, not the equipment. While tire swings are appropriate, standard swings are too problematic in group care to warrant their inclusion. Provide water-permeable sand box covers.

6.6.4 School-Age Outdoor Play Areas:

Play areas for school-age children should be separate, but linked to the play areas of younger children. School-age children must have structures and spaces that allow them to exhibit and practice their more advanced physical and social skills. Running, jumping, and climbing activities are supplemented by more athletic pursuits such as sports and games. Most children of this age have the physical ability to roller skate and ride bicycles. Quiet, semi-enclosed areas should be provided for socializing, completion of homework, or quiet contemplation. School-age children should be exposed to the same activities as the younger children in the center, such as sand and water play, construction activities, music, and artistic pursuits such as drawing or painting. Some playground suppliers have lines specifically geared to this age group which should be referenced for dimensions. Provide water-permeable sand box covers.

6.7 Specific Site Technical Criteria

6.7.1 Fences and Enclosures:

- Play yards must be enclosed by fences to define the play yard, allow ease of supervision of children, and protect them from unauthorized individuals or stray animals. The design of the fence is one of the most visible elements in the center and must be more than simply utilitarian. In general, chain link is discouraged. The only kind of chain link that may be used is dark vinyl-coated (avoid green). Exposed galvanized wire, which has a highly institutional appearance, is not appropriate. The fence must have no sharp exposed connections accessible to children. Note: A/E to reference ASTM fence standards (F2049-00).
- Provide bollards, raised planters or other devices to keep automobiles from veering into the play yard area.
- The transparent or opaque nature of the fence and fence height will depend upon the location and environmental conditions of the center and the requirements identified by the GSA security risk assessment.
- It is important that fences be designed so that there are no spaces between pickets which are between 87 mm ($3^{1/2}$") and 228 mm (9") to prevent children's heads from being entrapped. Fence openings less than 87 mm must be large enough to prevent finger or hand entrapment, but not so small that fingers and hands cannot penetrate the opening. There shall be no openings between 9mm and 25mm. These entrapment dimensions are very important and should receive particular care. Reference the most recent edition of the *Handbook for Public Playground Safety* of the CPSC.
- The perimeter of the play yard must be enclosed by an 1830 mm high fence when views into the play yard are allowed. As an alternative, a shorter fence with planting or landscape features, planted or positioned in such a way that an adult would not be able to reach over the fence, will be acceptable upon approval of the RCCC.
- When the play yard is adjacent to hazards, busy roadways, or is in a high security risk neighborhood, the perimeter of the play yard must be enclosed by an 2440 mm high fence. Views from the play yard should be screened either by the fence itself or with plants or other suitable device. Bollards, raised planters, or other devices should be used to protect play yards located next to driveways or roads where cars could swerve into the play yard area.

- The fence bottom should be a maximum of 76 mm above the ground. Exposed fence bottoms should have a smooth finish for child safety.
- Wood fences are not to be specified for new construction, existing ones should be smooth finished and splinter-free and if treated for exterior use should be guaranteed to be non-toxic. Avoid the use of wood pressure-treated with CCA (chromated copper arsenate). Instead of wood, maximize the use of products made from recycled plastic or recycled plastic/wood composite materials, which are inherently durable and weather-resistant. Following EPA's Comprehensive Procurement Guidelines (CPG), plastic fencing should be made from 90-100% total recycled content, including 60-100% post-consumer plastic.
- Gates must be self-closing and latching. Children's fingers must be protected from pinching or crushing on gate hinge spaces. Each play yard will have a vehicle gate to allow service.
- Fences may be used for protection from the elements and to control sunlight and wind exposure.
- Fences must be safe, with smooth caps and no finials or sharp picket tops on which children might be injured.
- Fences should be designed to discourage climbing, however, as per codes, they must be capable of withstanding code specific force applied horizontally.
- All openings in the fences must be no more than 88 mm wide. To prevent finger entrapment, there must be no openings in the fence between 9 mm and 25 mm wide.
- Fence construction should not use horizontal rails except for the cap and base to prevent climbing.
- All fastening devices used for fence construction should not project outward where they can injure children.

6.7.2 Plant Materials:

All plant materials must be non-toxic. See Appendix B for listing of common toxic and non-toxic plant material. In addition, contact local USDA Agricultural Extension Services for information on toxic or poisonous plants in the local area. Categories of plant hazards include berries, thorns, and plants with toxic leaves, stems, roots, or flowers.

Design planting and irrigation systems to minimize, down to zero, potable water for landscape irrigation. Maximize the use of native vegetation, which has inherently lower maintenance requirements than introduced species, and minimize, down to zero, the use of chemical fertilizers and pesticides. Use locally acquired composted materials for fertilization, and practice integrated pest management to control pests using the least toxic methods feasible. Use alternate, less toxic termite prevention systems, rather than the application of chemical soil treatment, for wood-framed buildings. Only where soil poisoning is determined to be necessary, use less toxic chemicals than chlorpyrifos ("Dursban"), which is currently being phased out by EPA.

- Plant materials should be used to bring natural elements to the play yard environment.
- The atmosphere of the center can be enlivened by the color, texture, sound, and motion of plant materials.
- Children's ability to observe plant growth is programmatically beneficial.
- Plant materials that display seasonal changes are desirable. Visual barriers, screens, and shade and wind protection can be created using plant materials in preference to, or in conjunction with, man-made structures.
- Plant materials should be used to define interesting play areas.
- Avoid trees with low hanging limbs if children can use them to climb to unsafe heights or to scale fences.

6.7.3 Dimensions and Clearances:

- For accessibility, please reference ADA 36 CFR 1191 Final rule: play areas 15.6. Main entrance pathways should be 1830 mm to 2440 mm wide. All pathways must provide adequate clearances as prescribed by the UFAS and ADA standards. Pathway slopes should be no greater than 1:20 unless they are provided with a handrail. (More than 1:20 is considered a ramp.) Cross slopes will be limited to 1:50.
- Platforms, stairs, handrails on stairs, guardrails, and protective barriers on platforms must be designed in compliance with requirements contained in the latest edition of the *Handbook for Public Playground Safety*, Consumer Product Safety Commission (CPSC). The height of platforms and the age group using the platform will determine when a guardrail or protective barrier is required. Guardrails may be used in platforms at lower heights, while protective barriers must be provided on higher platforms.
- Handrails must be provided to accommodate the intended age group on all stairs (including adults). For children, heights will range between 510 mm above the leading edge of the tread and 915 mm. In certain instances, it may be necessary to have two railings mounted at differing heights.
- Guardrails must be provided for infants and toddlers on all platforms greater than 300 mm above adjacent surfaces. Guardrails must be provided for pre-school-age children on all platforms greater than

505 mm above adjacent surfaces. The top of the guardrail must be 765 mm above the platform. The guardrail should not have openings between 87 mm and 228 mm to avoid the possibility of head entrapment. To prevent finger entrapment, there must be no openings in the fence between 9 mm and 25 mm wide.

- Protective barriers must be provided for all children on all platforms greater than 760 mm above adjacent surfaces. The protective barrier must be 740 mm above the platform, with no openings greater than 75 mm and no horizontal footholds.
- Maximum platform height for infants is 455 mm above adjacent floor level.
- Maximum platform height for toddlers is 915 mm above adjacent floor level.
- Maximum platform height for pre-school children is 1370 mm above adjacent floor level.
- Pathways under trees and constructed elements must have a minimum of 2035 mm headroom.
- There must be a fall zone with a resilient surface under all climbing and moving fixed play equipment from which children could fall as per the current CPSC and local licensing. This is typically 1830 mm radius. Criteria for resilient surfaces are discussed below.
- There must be a 1830 mm clear radius approach zone to all play equipment, not including the fall zone. A tricycle path cannot run through a fall zone area.

6.7.4 Shading:

The correct mix of sun and shade is vitally important. At least 50 percent of the play area should be exposed to sunlight at any time during the morning and afternoon when the play yard will be used. The degree and orientation of shade depends on local climatic conditions. Shade areas, including porches, gazebos, and other structures, should provide a minimum shaded area of 1832 mm in any direction. Shading structures and materials that may be used include trees, exterior screened rooms, park shelters and structures, awnings, and umbrellas. *See also 6.4.5.*

6.7.5 Play Yard Surfaces:

Surfaces for play yards, based on their physical properties, can be categorized into three general types: resilient, hard, and grass/turf. A variety of ground surface texture is required in a playground.

6.7.6 Resilient Surfaces:

Resilient surfaces serve to reduce the impact from falls and are required in specific equipment areas referred to as "fall zones." Refer to ASTM F-355 (most recent addition), *Shock Absorbing Properties of Playing Surface Systems and Materials,* and the most recent publication of the *Consumer Product Safety Commission's* Handbook for Public Playground Safety, for specific requirements concerning these resilient surfaces. Examples of approved resilient surface materials are pre-engineered wood accessible hardwood (not simply wood mulch), preformed rubber matting, and poured-in-place rubberized surfaces. Water needs to drain through these surfaces and off the property.

Following EPA's Comprehensive Procurement Guidelines (CPG), rubber play yard surfacing materials should be made from at least 90-100% recycled tire rubber, including rubber pavers as well as loose granulated rubber surfacing, where appropriate, and where the product meets GSA's needs.

The fall-absorbing properties of each will depend upon the installed thickness and the method or system of installation. However, whichever type of fall attenuation is used, the CPSC recommendations and requirements must be achieved. These surfaces vary dramatically in cost. The least expensive are the loose fill variety which typically require a much higher level of maintenance to ensure that the required depth is maintained greatly increasing the life-cycle cost. This trade-off needs to be recognized, during the design process. The designer may recommend the more expensive rubberized solutions for ease of maintenance, but should receive written assurances that its impact-absorptive properties are not lessened by exposure to sunlight and the color will not fade significantly. Adequate drainage must be provided under any resilient material, including wood chips. A combination of materials such as grass, resilient surface, and pre-engineered wood chips incorporates the advantages of each material and renders a more natural, less institutional appearance than any one alone.

The designer should also note the following:

- Organic materials, such as wood chips, bark chips, and pre-engineered wheel chair accessible processed wood fibers, have good impact-absorbing potential, but require proper maintenance to ensure proper, consistent depth.

- Tire chips have good resiliency and are relatively inexpensive, but can leave black marks on shoes and clothing. They have proven problemmatic and are not recommended, unless there is assurance that problems cannot occur. They also require maintenence to ensure that proper depths are maintained.
- Ensure that manufactured resilient mats will retain slip resistance when wet and are tightly installed so as not to cause tripping hazards.
- Artificial turf alone does not have the resiliency for "fall zones" and can be abrasive and convey an ugly, unnatural impression. This material is not recommended for use as a play yard surface.

6.7.7 Hard Surfaces:

Hard surfaces should be provided in areas for wheeled riding, and game court areas, and on some all-weather pathways such as for wheelchair access. Hard surfaces are used for their durable, low-maintenance properties. Examples of hard surface materials are concrete, asphalt, stone, or masonry pavers. The durability of each material will vary based on factors such as the method of installation and the thickness of the surface material. Surfacing concrete in particular, with 10 mm of rubberized surfacing, is highly recommended to minimize abrasions.

The severity of weather will affect all paving surfaces, but cast-in-place concrete over a well-compacted subgrade is the most durable, maintenance-free paving material for hard surface areas, although it should be finished to be non-slip. Asphalt paving is an acceptable alternative to concrete in vehicular areas, but degrades more quickly than concrete. Masonry pavers make a durable surface and have numerous options for patterns.

Consider the following:

- The use of pavers may introduce joints and textures in the paving surface that can become uneven over time if they are not laid over a concrete base. Uneveness may present a tripping hazard. Depending on the method of installation, the cost of the surface will vary. Asphalt usually will be the least expensive and stone or masonry pavers the most expensive. Again, it is possible to use a variety of surface configurations and materials to increase the impression of "naturalness" in the play yard. Specifications and supervision to ensure excellent compaction will greatly affect the serviceability of the surface material.
- Materials used for pathways must allow for use during inclement weather. Acceptable materials include concrete, asphalt, stone or masonry pavers, rubberized surfaces, rubber matting, or wood chips. The edge of pathways should not create trip hazards, and may need to be tapered for transitions. Any surface must allow access by those in wheelchairs.
- The main entrance pathway must be paved. Gravel and loose stone are not recommended for any walkway surfaces since children may put them in their mouths or may throw them. Smooth surfaces provided for wheeled toys should not have joints wider than 12 mm because they may cause toys to tip.

6.7.8 Grass/Turf Surfaces:

Grass/turf is desirable for open play areas but is not appropriate in "fall zones." This surface is seasonal, and is not suitable during periods of rainfall or snow. Exposure to grass/turf allows children to experience natural materials and provides a pleasant texture to play on, but requires constant maintenance and may need an irrigation system. The designer should consider using under-turf products to minimize turf root compaction, which is a major cause of grass detenuation. There must be supervised access for maintenance of the play yard by facility maintenance teams.

CHAPTER 7:
INTERIOR SPACE DESIGN

7.1	**General Information**	**7-1**
7.1.1	Entry and Circulation	7-1
7.1.2	Staff Areas	7-1
7.1.3	Classrooms	7-1
7.1.4	Common Areas	7-1
7.1.5	Service Areas	7-1
7.1.6	Entrance and Circulation	7-1
7.1.7	Exterior Transition Spaces	7-2
7.1.8	Vestibule	7-2
7.1.9	Reception	7-2
7.1.10	Main Circulation	7-2
7.1.11	Staff Spaces	7-4
7.1.12	Director's Office	7-4
7.1.13	Parent/Teacher Conference Room	7-4
7.1.14	Staff Lounge	7-5
7.1.15	Staff Toilet	7-5
7.1.16	Central Resource Storage	7-5
7.2	**General Concepts for Classroom Design**	**7-5**
7.2.1	Classroom Areas	7-5
7.2.2	The Classroom Location	7-7
7.2.3	Classroom Size	7-7
7.2.4	Separation of Spaces	7-7
7.3	**Scale**	**7-8**
7.4	**Architectural Form**	**7-8**
7.5	**Component Areas of Classroom**	**7-10**
7.5.1	Classroom Entrance Areas	7-10
7.5.2	Cubby Storage Area	7-10
7.5.3	Infant and Young Toddler Cubbies	7-10
7.5.4	Older Toddler, Pre-School, and Kindergarten Cubbies	7-10
7.5.5	School-Age Lockers	7-10
7.5.6	Open Activity Area	7-10
7.5.7	Activity Area for Infants	7-11
7.5.8	Activity Area for Toddlers	7-12
7.5.9	Activity Area for Pre-School Children	7-12
7.5.10	Activity Area for School Age Children	7-12
7.6	**Lofts/Platforms**	**7-13**
7.6.1	Infant Lofts and Platforms	7-13
7.6.2	Toddler and Pre-School Lofts and Platforms	7-13
7.6.3	Art Sink	7-14
7.6.4	Toilets and Sinks	7-14
7.6.5	Diapering Station and Storage Area	7-15
7.6.6	Sleeping and Napping Areas	7-16
7.6.7	Nursing and Lactation Areas	7-17
7.6.8	Food Preparation	7-17
7.6.9	Eating/Table Area	7-18
7.6.10	Child-Accessible Display	7-18
7.6.11	Classroom and Teacher Storage	7-18
7.6.12	Teacher Storage	7-18
7.6.13	Multi-Purpose and Large Motor Activity Spaces	7-19
7.6.14	Sick Bay	7-19
7.6.15	Service Spaces	7-19
7.6.16	Kitchen	7-19
7.6.17	Laundry	7-20
7.6.18	Janitor's Closet	7-21
7.6.19	Service Entrance	7-21
7.7	**Mechanical/Electrical/ Telephone Equipment**	**7-21**
7.8	**Design Features to Avoid**	**7-21**

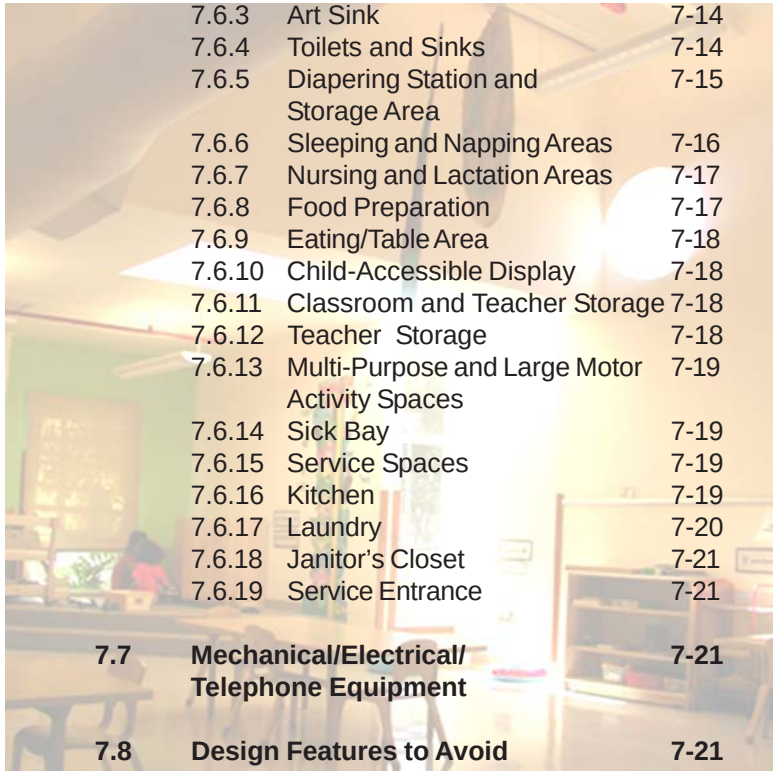

CHAPTER 7: INTERIOR SPACE DESIGN

This chapter provides concepts and criteria for the design of the interior spaces within a child care center. Major types of spaces include entry and circulation, staff, classroom, common, and service areas.

7.1 General Information

Spaces within the center can be separated into three major types, including a) the classroom and common use areas used by children; b) the staff areas used by teachers and administrators; and c) the service areas used by people servicing the center. The entry to the center and main circulation pathways unify these areas. Following are descriptions for each space type. See the Finish Schedule for finish recommendations.

7.1.1 Entry and Circulation:
The entry includes the transition space, vestibule, and reception area where parents, teachers, children, and visitors enter the facility. The main circulation provides pathways between discreet functional spaces.

7.1.2 Staff Areas:
Staff areas include the director's office, assistant or secretary work space, staff lounge and work area, staff toilet, parent/teacher conference area, and central resource storage.

7.1.3 Classrooms:
Classrooms for infants, toddlers, pre-school children, school-age children, and mixed-age groups of children are specific to the group using the space. These classrooms must have a variety of spaces to support the children's care and developmentally appropriate activities. Architecturally defined spaces within classrooms include the entrance, cubby storage, classroom and teacher storage, diapering station and storage, toileting and hand washing, sleeping, nursing, and food preparation. The classroom should have an art sink, raised areas, and loft areas (though these level changes need not be built in), and must have open, architecturally unrestricted areas.

7.1.4 Common Areas:
The center may have additional space, typically in a centrally located area for use by children, teachers, and parents. This is desirable because one beneficial "by-product" of a child care center can be a stronger sense of community among those who use the center.

The center may also include a multiple-purpose space. The multiple-purpose space may be used as a meeting or gathering area and as a large-motor-activity area. If adequate outdoor play yard space is not available, or if the climate in which the center is located is not conducive to outdoor play during significant portions of the year, an indoor large-motor-activity area must be provided. If lofts are to be located in this room, applicable protective surfacing must be provided for the highest unprotected deck of the loft or climber, whether portable or permanent (Ref: ASTM-F1292-99).

An isolation sick bay, where a child will wait until taken home by a parent, is best associated with the center director's office. Where local licensing does not require it to be separate, it should not be completely separate as this may frighten the child. See Chapter 10 for ventilation requirements.

7.1.5 Service Areas:
The center requires space for services including food, laundry, janitorial, and service dock/entrance.

7.1.6 Entrance and Circulation:
These spaces should allow for safe and convenient arrival and departure. The character of the main entry is vital to establishing a friendly impression for the children and creating a non-threatening transition from the parent's care to that of the center. Certain features will help promote this desired impression: 1) The entrance door must be glazed with safety glass, affording full visibility for children and adults, 2) Children should be able to see other children in classrooms, as well as interesting displays from the entry to help allay anxiety; and 3) If a reception desk is desired for center operations (typically in centers over a population of 74), the reception desk should allow children to easily see the adult behind it. It should be a simple desk, not a high counter such as might be seen in a professional office, for example. (The need for a reception desk should be questioned during

design concept development, as it has been noted that this feature in existing centers is often underutilized). The main entrance should be in close proximity to an adult toilet room for use by parents.

Permanent entryway systems (grills, grates, etc.) should be designed into the floor at all high volume entryways to capture dirt, particulates, etc. from entering the building.

Other points of entry for the facility include service entry access to the play yards and the classrooms. The main entry should include an exterior transition area (where a covered bench for good-byes, "shoe-tying," and other child/parent interactions can comfortably occur). A vestibule for energy conservation, conforming to ADA dimension requirements, and a reception area are also required. Secondary entries should have transition areas, but do not require thermal vestibules. Consider providing porches or mud rooms, depending upon climatic conditions, particularly in rainy locations. It may be desirable to alarm secondary entrances also, especially where these locations are difficult to monitor.

Fire egress doors should also be alarmed.

7.1.7 Exterior Transition Spaces:

Ground materials and landscaping leading to the building entry should be designed to minimize the potential for tracking soil and water into the building. Rough textured ground surfaces are appropriate at these areas, combined with landscaping that keeps soil and foliage away from the path of entry.

All exterior entries used by children must have transition spaces consisting of a bench and a covered area of not less than 2 square meters at a minimum. "Covered" means with a roof, canopy, or trellis. Transition spaces are important in creating a comfortable environment and integrating the exterior and the interior. These spaces allow children to adjust to the changes between interior and exterior light levels and temperatures. The transition spaces also may serve as a "mud room" or may provide an intimate area for children within the outdoor environment.

Overhanging elements extending from the building, such as porches, verandas, canopies, or arcades can create successful transition spaces and in some climates can be used for program areas.

7.1.8 Vestibule:

Provide views of the short-term-parking area from the entry vestibule and design the windows to have low sills so that children can look out of and into the center. This vestibule should consist of two sets of doors to provide energy conservation, and the door must be arranged in a way to permit use by those in wheelchairs, as well as provide a flush-mounted walk-off mat to prevent water and soil from being tracked into the center. The entrance will require some security devices for control, and must be provided as designated by ADA and FPS's security risk analysis. This equipment should be non-intrusive and have a non- threatening appearance. Refer to Chapter 10 for more information on technical requirements. In areas with snow and ice, a roof overhang or canopy shall be installed to ensure the exit access is readily accessible at all times.

7.1.9 Reception:

Provide a reception area immediately inside the entry. This area needs to be warm, bright and welcoming, and as comfortable as possible. It is essential, in marketing the center, that it have these qualities. The reception area connects the entrance to the main circulation pathways of the center, and from this area parents escort children to the classroom.

A reception desk, at desk height, may be provided in large centers. If it is provided, it may be designed in a way that allows it to serve several functions. For instance, it may incorporate sign-in facilities or the parent/teacher "mailboxes," or both. A counter, which is typically simpler and less expensive than a reception desk, may also serve these functions. If space permits, a small table or desk would be appropriate. In all events, a child should be able to see the adult behind the desk upon entry. Typical furnishings in the reception include a sofa, chair, end table, and coffee table.

A slotted fee box for tuition checks should be provided near the reception area, together with cubicles for parent notices as well as a notice/bulletin board. Select durable finishes that have an informal, comfortable appearance, and establish a warm, inviting feeling through use of color, soft seating, plants, and art work. Recommended finishes include carpeted floor and a wall finish, which is washable and durable.

7.1.10 Main Circulation:

There are two types of circulation paths in a center: the main circulation connecting the various classrooms and major spaces of the center, and the internal circulation patterns within those spaces. Circulation within classrooms will be discussed in the classroom section of this chapter.

The main circulation serves as a community space as well as a pathway. Especially in child care centers, the circulation space should never be simply utilitarian in character. Instead, it should be conceived as a street or a gallery with stopping and cueing areas along the way. There is opportunity for important social in this space. It is a space to meet other children and parents; a vantage point to see into classrooms, an exhibition space for the work of children or prints of other kinds of art, and perhaps even quotations to inspire and educate adults about child care issues. The illustrations below are typical of this kind of differentiation.

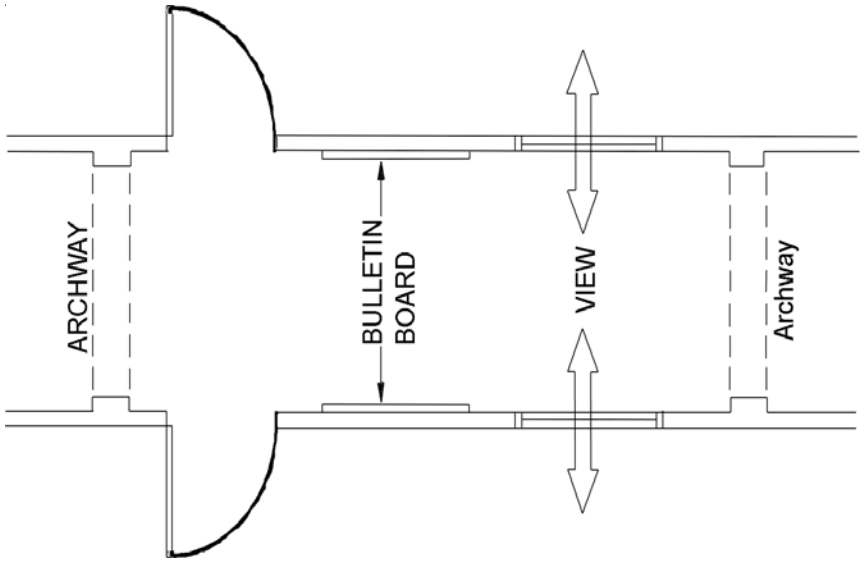

The designer should strive to arrange spaces to be economical in the amount of built area devoted to "pure" building circulation. There should be at least one accessible drinking fountain in the corridor. But the designer must de-emphasize the institutional appearance typically created by a long, undeviating, double-loaded corridor (with doors to rooms on both sides). When it is not feasible to vary the layout of the circulation corridor, design strategies to de-emphasize such an impression include:

- *Lighting:* Skillful introduction of artificial lighting (for instance, instead of the dead center placement of fluorescence in corridor ceilings, consider using some strategically placed wall washers, or better yet, introduction of natural light through skylights). Providing a window, glazed door, or skylight at the end of a corridor is very psychologically advantageous.
- *Floor Pattern*: A strong sense of place for children can be created by a floor pattern. It can also be used by the skillful designer to diminish the impression of long, double-loaded corridors. For instance, large pattern repeats are often effective to de-emphasize the "tunnel" appearance of double-loaded corridors. Likewise, patterns which are not symmetrically arranged or which emphasize functional areas (such as entrances to classrooms) are effective means to achieve the same end.
- *Color.* The designer should explore the use of color to visually alter the dimensions of otherwise institutional looking, double-loaded corridors. Care should be taken to avoid an over-stimulating color scheme. Avoid primary red and oranges.

Children gain a sense of orientation when they can see the entrance to their classroom and recognize landmarks such as displays, common areas, and other design features. Teachers and children require clear views between the classroom and circulation areas at their respective viewing levels.

The main circulation must be designed and constructed to serve as a primary means of egress. Through judicious arrangement, the designer should strive to lower the amount of area devoted to a purely utilitarian circulation. In no case should more than 30 percent of the OFA within a facility be used for primary circulation and service areas unless the center location is very irregularly configured. The Occupiable Floor Area (OFA) allowance includes circulation within the classroom.

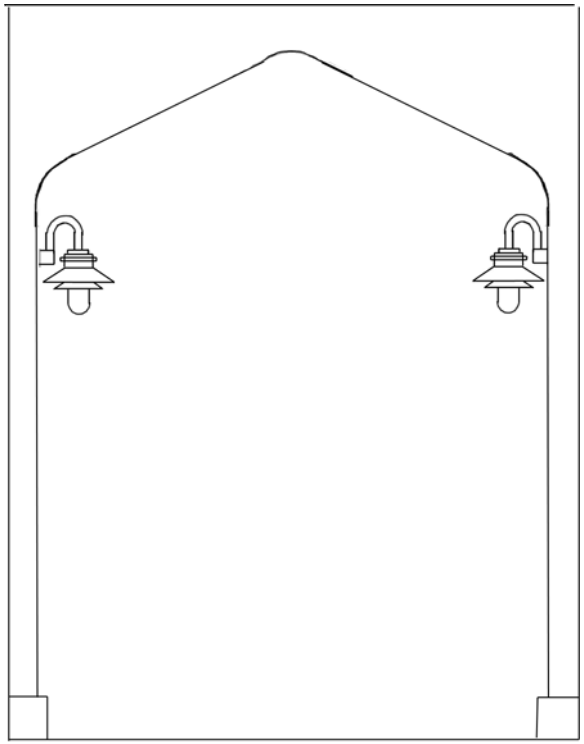

ARCHWAYS

Eliminate outside corners in the circulation pathways to the extent possible. Angled or curved corners aid in manipulating cart traffic and strollers, and eliminate a possible source of injury.

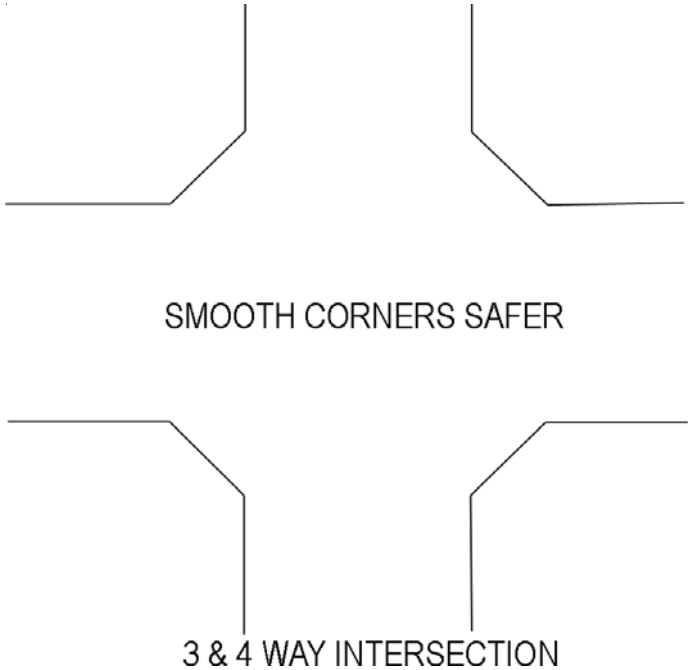

Recommended finishes for major circulation paths include impervious durable surfaces at the floor (such as linoleum) and at wainscot height (formaldehyde-free medium density fiberboard) with a continuous, flush metal strip above it where children's art can be displayed. Paint above wainscot height and use safety glass in windows along the corridor.

7.1.11 Staff Spaces:

Staff areas include:

- Director's office
- Assistant or secretary's work space
- Parent/teacher conference area
- Staff lounge and work area
- Staff toilet
- Central resource storage

Spaces used by the staff, particularly teachers, should be located to provide easy access from the main circulation.

7.1.12 Director's Office:

The director will perform most desk work and interviews in his or her office. During the day, the director may meet there with parents, staff members, children, or other visitors, and conduct parent interviews. Larger centers may have an assistant or secretary who works closely with and shares duties with the director, but needs a seperate work area.

Place this office in a quiet space, next to the reception area and accessible to visitors. To supervise properly, the director's office must have excellent views of the main entry, reception and as many classrooms as possible.

The director's office should be comfortable, with a carpeted floor and washable wall surfaces. Provide adequate lighting, concentrating on the task lighting component, and acoustical separation of at least 45 STC from the children's active areas.

Furnishings should include a desk and chair, two guest chairs, filing cabinets, coat rack, shelving for books and resources, and lockable storage cabinets or a closet for personal belongings and first aid items. Provide space for a cot (for a sick child). (See the discussion about an isolation sick bay under 7.1.4 Common Areas.) If an assistant or secretary works in the director's office space additional furnishings are needed, such as a desk and chair, filing cabinets, storage for personal belongings, and additional guest seating, along with computer and telephone equipment.

The director's office requires a telephone and may have security video monitors. Provide appropriate power supply to accommodate a personal computer and printer as well as a fax machine. A copier and video equipment also may be stored here if not placed in a work room or a resource storage area.

7.1.13 Parent/Teacher Conference Room:

Parent/teacher conferences and meetings between staff members usually occur here. This space should be located in a quiet, private area, adjacent to the director's office. It should have data connect cables and jacks.

The conference space should be comfortable, pleasant, and quiet. Furnishings include a conference table and seating for a minimum of six (depending on the size of the center and its associated staff), shelving for books, and a notice/bulletin board. Lighting should be dimmable so that video materials may be viewed.

7.1.14 Staff Lounge:
The staff use this space not only as a retreat, but also as a workroom. They eat, relax, and converse here, plan curriculum, and prepare classroom materials. It may contain a cot or sofa. The staff lounge should be located near the adult toilet and central resource storage. This space requires visual and acoustical separation from children's areas, but should be easily accessible to the staff.

The lounge needs to be comfortable, pleasant, and soothing. Provide a counter with a microwave, a sink with plumbing connections, at least an under-counter refrigerator, and cabinets. Provide impervious flooring at the counter area. All base cabinets should have "child proof" hardware. Furnishings include a table with four chairs, a small sofa, and storage (some of which is lockable).

The workroom must have adequate space and power connections for telephone, computer, video equipment, and laminating and copy machines (either here or in the director's office). Isolate these machines acoustically within the space, perhaps in an alcove, for better control of noise. Provide space at the counter for a butcher paper holder and an art waxer (a piece of equipment that allows children's art to be hung without the need of tape or pins).

7.1.15 Staff Toilet:
A center must provide at least one adult toilet, although two, remotely located from each at either end of the center, are recommended. Two adult toilets are desirable to enhance the center's functioning because teachers will be out of classrooms for shorter periods. Adult toilets in the center must meet all UFAS and ADA code requirements. Toilets should be accessible from the reception area and staff lounge. Recommended finishes include impervious flooring such as linoleum and painted walls above an impervious wainscot. One adult toilet should be located in or near the infant and young toddler classroom areas, and will be discussed later in this chapter in the section on classrooms. Provide electronic faucets in adult toilets. Adult toilets should be provided with toilet seat cover dispensers.

7.1.16 Central Resource Storage:
The director and teachers use this centrally located resource room for bulk storage of curriculum materials and supplies and for storage of resource tapes, books, as well as audio/video equipment. The central resource storage should not be seen as a substitute for the small scale storage necessary within the classroom itself. Typically, this type of storage in the classrooms is provided by wall-mounted cabinets. The base of such securely anchored cabinets must be no lower than 1370 mm above the finished floor below.

The storage room should have open shelving; lockable, closed-door storage; and filing cabinets. If space permits, a work counter and a counter-height stool may be provided.

7.2 General Concepts for Classroom Design

Children spend most of their day in the classroom. It affords facilities for care functions and opportunities for developmentally appropriate activities. Parents typically drop off and pick up children at the classroom. Adults may visit during the day or help out as volunteers.

7.2.1 Classroom Areas:
The classroom design includes functional areas defined by furniture arrangements and constructed elements that vary depending upon the age group. In order to maximize the amount of space devoted to these important functions, the circulation between entrance and exits should be as direct as possible. It is appropriate to position tables and work surfaces adjacent to circulation for more crowded functions, while retaining corners and floor area for more protected and nurturing activities. The areas within the classroom should be designed or arranged to fit four or five children and one adult, although there should also be a group gathering area. Finally, there need to be "get away" areas (alcove like) so children can be by themselves or in smaller groups. Classrooms should be equipped with convenient bins for recycling, at the least, suitable waste paper.

Major classroom elements will remain fixed, such as those requiring plumbing connections, risers or casegoods secured in place for safety reasons. Plumbing underneath sinks must be inaccesible to children. Children and their teachers will modify the remaining space continually to create areas for their activities. The classroom should provide flexibility for these activities. The arrangement of storage cubbies for children's personal items will be less frequently altered. Manufactured cubbies anchored to partitions or low walls have been found to be a cost effective solution

rather than built-in types. The designer must ensure that the space, as designed can accommodate the manufactured cubbies specified. To ensure that the proliferation of children's personal items in and around cubbies does not destroy the order and function of the classroom, cubbies should be arranged to form a "cloakroom," or entrance alcove, with their openings facing away from main classroom areas.

Children require opportunities for a range of diverse activities in the classroom. Limited areas of mirrored ceiling tiles, especially about infant areas are desirable. Lofts, which GSA will typically purchase, offer an important feature for exploration within the classroom. Though provided by GSA, the designer must accommodate this furniture within the design. Built-in lofts are not recommended. Where low shelves and partitions are used to separate use areas, they must be secured against tipping. A mixed-age classroom typically provides all elements needed for each age group. A well-equipped classroom for particular age groups requires the following specific areas:

Infant Classroom:

- Entrance
- Cubby storage
- Classroom and teacher storage
- Adult toilet within classroom (preferable), but no more than 10 meters from infant classroom entry
- Diapering station and storage
- Sleeping/crib area
- Nursing area
- Eating/table area
- Food preparation
- Open activity and crawling area for play and development

Young Toddler Classroom:

- Entrance
- Cubby storage
- Classroom and teacher storage
- Adult toilet within 10 meters of entry
- Diapering station and storage
- Children's toilets and sinks
- Eating/table area
- Food preparation
- Open activity area for play and development
- Area with level change (three risers minimum)
- Cot storage

Older Toddler Classroom:

- Entrance
- Cubby storage
- Classroom and teacher storage
- Children's toilets and sinks (one sink at toilet exit preferable to avoid congestion)
- Eating/table area
- Art sink
- Area with level change (three risers minimum)
- Open, unrestricted activity area
- Water fountain
- Cot storage

Pre-School Classroom:

- Entrance
- Cubby storage
- A three-year old classroom requires a small diaper changing area
- Classroom and teacher storage
- Children's toilets and sinks (one sink at toilet exit preferable to avoid congestion) and seperate toilet for male and female for ages 4 and up
- Eating/table area
- Art sink
- Water play area
- Drinking fountain
- Loft area
- Area with level change (three risers minimum)

- Open, unrestricted activity area
- Block area (5.95 M squared minimum) that is located away from main circulation
- Cot storage

School-Age Classroom:

- Entrance
- Loft area
- Area with level change (three risers minimum)
- Personal storage
- Classroom and teacher storage
- Private male and female toilets with hand washing sinks in toilet rooms where more than one toilet is required
- Eating/table area
- Art sink
- Open, unrestricted activity area
- Kindergarten classrooms require separate male/female toilets, which comply with ADAAG and with UFAS. Doors must be low enough (1500 mm max.) to allow adult supervision. If child privacy is an issue, raise to 2000 mm. If windows are used they should also be located to allow adult supervision of the areas.

The zoning of classrooms is critical to the success of the center. The designer will have to consult at length with users including the provider, if possible, as well as the RCCC. General design principles include:

- Discreet functional areas need to be planned in the design of the classroom even though they will be created primarily with furniture.
- Noisey and active areas need to be away from quiet areas.
- The circulation from equipment such as slides needs to flow away from activity centers.
- Block play is an essential activity and areas must be provided where blocks can remain in position for more than a day. This means it must be protected from main circulation paths and active play.
- Do not encumber the space with more tables than necessary for meal time. Avoid excessive distance between them. In terms of using the minimum amount of circulation space, rectilinear tables arranged with 1 m clear space between them have been found to work best.

7.2.2 The Classroom Location:

In order to receive the maximum access to natural light, classrooms should be located along the exterior perimeter of the building. Where this is not possible, the classroom must "borrow" the maximum amount of natural light from areas that are located along an exterior wall which has windows. Classrooms require direct access to the central circulation system and as direct as possible to the play yards. Classrooms should also be close to common use spaces. Infants and young toddlers must have classrooms separate from other age groups. In small centers the design should allow for future expansion.

7.2.3 Classroom Size:

Design classrooms to accommodate the number of children for each age group. Refer to Chapter 4 for the NAEYC table for maximum group sizes and Chapter 5 for the table defining space allowances for each age group's classroom. Local licensing requirements must also be referenced. The most stringent standard should apply.

7.2.4 Separation of Spaces:

Separation can be achieved by using solid and glazed partitions (either partial or full height), doors, casework, cabinets, panels, and railings. Three types of separation must be considered:

- Acoustical separation
- Visual separation
- Physical separation

The following aspects of separation need to be considered when designing the classroom spaces:

- **Separate classrooms:** Groups of children must be physically separated from each other. Sound transmission between classrooms should be controlled, with not less than 34 STC partitions, although complete acoustical separation is not necessary. High noise levels from adjoining classroom spaces can disrupt class activities and raise tension levels. Some noise transmission is desirable to allow children to be aware of other groups. Small, strategically placed windows between classrooms is recommended, to allow children the opportunity to view other classroom activites. Placement of windows should not interfer with potential placement of classroom furniture. If placement of several windows is not feasible, at least one window at child and adult level should be programmed.

- **Partial enclosure:** Provide partial height enclosure for fixed elements in the following areas: food preparation, children's toilet and hand washing, sleeping area for infants, and the rear of cubbies. Food preparation and toileting/diapering areas must be clearly separated to diminish the chance that a caregiver could inadvertently go directly from diapering to food preparation without hand washing. Partitions with vision panels can be used effectively for this purpose to separate these areas while still allowing supervision.
- **Complete enclosure**: Provide complete enclosure for teacher storage within the classroom and for the adult toilets.

7.3 Scale

If the classroom is to be "nurturing," its design must reflect the designers appreciation of children's scale, including the size of individual spaces within the classroom and the scale of furnishings. (Refer to Anthropomorphic Table.) It is important to adjust the perceived scale of the classroom. While areas of high ceilings in a classroom may be desirable, in spaces which the child perceives as " too high" to have a residential character (85% of the room over 3350 mm high) perceived height must be modulated.

For instance, consider using sources or pendant lighting or ceiling fans hung at no lower than 2285 mm above the occupied floor area below. Pendant task lighting over fixed elements may hang as low as 1675 mm as long as headroom is not required for passage. Choose fans to improve air flow and energy efficiency with rotation that can be reversed, depending upon the season. Aside from the obvious mechanical and lighting enhancements that these strategies provide, they also help tailor spaces to children's spatial perceptions. In addition, this provides the opportunity to hang banners and create trellis ceilings over activity areas. Ensure that they will not impede the function of the sprinkler system.

Window sills and counters used by children should be child height, depending upon the age of the child using the space. However, leave 460 mm beneath widow sills (measured to the classroom finish floor) so that furniture and equipment can be placed easily along exterior walls. Storefront-type windows starting at the finished floor are not desirable.

Furnishings and equipment for children should be child-scaled, such as toilets, hand-washing sinks, and countertops. Countertop height and reach depth should provide children with the opportunities to use them unassisted.

Consideration must also be given to the adults using the space. Center design must be adult-friendly, as well as child-friendly. As a result, not all elements should be reduced in scale. Door locks, light switches, fire alarm pull stations, and other functional elements should retain adult scale and be mounted at standard heights. Food preparation, storage and service spaces, and other areas of the center used by adults should remain at standard scale.

Furnishings for adults such as sofas used for comforting and reading to infants and young children should be adult scale. Some items may double function for children and adults. In placing electrical/telecommunication or security equipment, ensure that cords and wire are not placed in such a way that children can reach and play with them or that their placement can pose a strangulation threat.

7.4 Architectural Form

The architectural form of the classroom should be an appropriate setting for a child, conveying a definite sense of place while preserving optimal flexibility, with the great majority of the space free of constructed elements. In this way, furniture arrangement can create the required functional area.

- **Vary ceilings heights:** Vary ceiling heights to define areas, disperse light, and create interest. Higher activity levels are often encouraged by higher ceiling heights, while quiet areas are supported by lower ceiling heights. The probability of higher construction costs must be considered in determining the extent of variation.
- **Vary floor levels:** Consider varying floor levels to create riser lofts and low platforms. Sunken areas are also effective. The designer should be aware that permanent, constructed level changes may restrict flexibility and use up valuable open floor space when they become too large. Fixed level changes will require a wheelchair accessible ramp. Some level change may be effected by elements which are not fixed. When used effectively, level changes add interest and create intimate areas for children. Terraces and platforms provide areas for socio-dramatic play activities and also can double as seating areas. Lofts that can accommodate 3-5 children can offer children many possible activities, such as large motor activities, dramatic play, or perhaps space apart for quiet activities. The designer must keep in mind that low level changes can sometimes be a tripping hazard.
- **Vary wall configurations:** Consider modulating partitions to create interest, soften a space, to create a more nurturing impression, or to create special spaces. Avoid the occurrence of 90 degree or acute

outside corners that pose hazards to children who may run into them. Curved or obtuse angled partitions should be considered instead. 25 mm rounded outside corner drywall beads should be used. The designer must keep in mind that visibility of all areas within the classroom is a key factor, so avoid creating "blind" areas that would make teacher supervision difficult.

- **Locate plumbing fixtures in one area:** Elements with plumbing connections, such as toilet areas and art sinks, should be grouped together for more efficient construction where possible. Food preparation must be separated from diapering and toilet areas, though it can be placed on the opposite side of partitions with plumbing.
- **Provide ample display space:** Provide a significant amount of classroom wall display area at children's height for display of art work and projects. Include devices for display of artwork that do not involve tacks (because they are dangerous around young children) and tape (because it can damage the finish of partitions). Display of the children's artwork is an indication of a successful child care center, where children's art and development are valued.
- **Preserve inside corners:** Corners within the classroom offer opportunities to create differentiated areas. Retain inside corners, and use the features such as low partitions in back of cubbies to create the nurturing corner spaces.
- **Provide natural light:** The successful use of natural light benefits centers by reducing total energy use for lighting while improving the indoor environment and child well-being. Data from two studies on school environments, which have similar characteristics to child care centers, demonstrate the potential for these benefits:

  Daylit schools saved an average of $0.27/SF in energy costs over non-daylit schools. (Source: Energy Performance of Daylit Schools, Innovative Design, NC.)

Students from classrooms with more natural light scored up to 25% higher on standardized tests than other students in the same school district. (Source: Study by Heschong Mahone Group, CA.) For specific technical requirements related to windows and daylighting, see section 10.7.

- **Provide views for children:** Views allow children to be aware of their surroundings and the world beyond the center. Views should be provided to the outside, particularly to the play yards. Views to atria and planters, common spaces, other classrooms, and circulating pathways also are of benefit. Windows should be located at sills low enough for children to see out of them, yet should allow small-scaled furniture to be placed beneath them.
- **Provide visibility to the staff:** Teachers must have an unrestricted view of the children at all times, both within the classroom and in the play yards. Views must be provided between classrooms and other spaces in the center. Any interior doors, with the exception of adult and school-age toilet areas, must have visibility panels. Dutch doors are not recommended as they pose a hazard for finger pinching. Partial walls and interior glazing allow visual supervision and allow children to be aware of others in the center. Partitioning at the sides of toileting areas should be no higher than 1070 mm to allow supervision of children younger than kindergarten; 1370 mm for kindergartners.

There must be gates with view panels in infant and toddler classrooms to prevent children from accessing kitchen and diaper areas.

- **Zone classroom space to separate active and quiet activities:** Use variations in ceiling height, floor height, wall configuration, light levels, finishes, and open areas to modulate perceived activity levels within the different areas of the classroom. Zone high-activity areas, such as the entrance, eating/table areas, and the exit to the play yard, away from areas intended for sleeping and quiet activities. Likewise "messy" areas and "clean" areas should be considered by the designer and zoned to provide appropriate separation.

Figure 7.9: Quiet and Active Areas

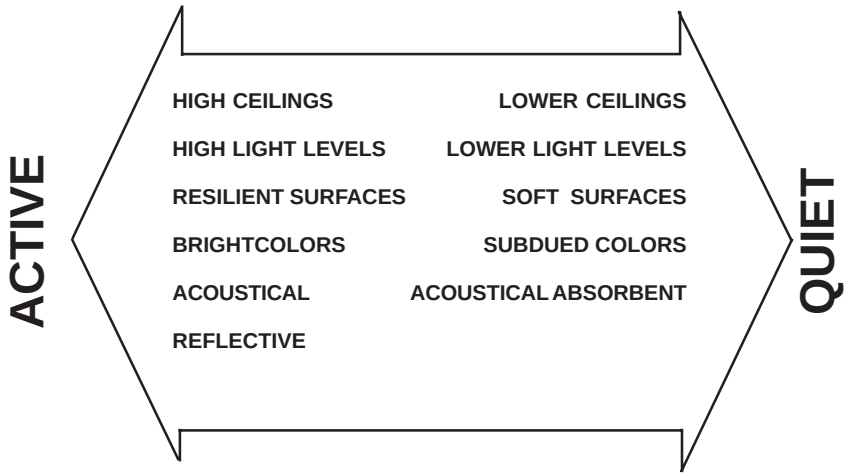

7.5 Component Areas of Classrooms

7.5.1 Classroom Entrance Areas:

Each classroom should have a distinct and welcoming entrance. The entrance must meet all emergency egress requirements. A second classroom entrance, either to the main circulation path or to the play yards, should be considered and may be required for egress, depending on center configuration. Place the entrance along a wall, leaving valuable corners available for activity areas. Entrances should allow for views from the main circulation area to classrooms. Near the classroom door, there must be a sign-in counter (with storage below) at approximately 845 mm above the finished floor.

7.5.2 Cubby Storage Area:

Upon arriving at the classroom entrance, children typically store their outdoor clothing and personal belongings. They may again need their outdoor clothing at times during the day to go to the play yard or on excursions and to go home. Parents may linger in the cubby alcove, spending time with their children or with teachers or other parents. The design of the cubby area must consider these activities so that bottlenecks do not occur at the classroom entrance. Arrange cubbies in a "cloak room" arrangement so as not to take up valuable classroom wall space. All the cubby storage areas must include these features:

- Compartmentalized open-front, scaled to child size, per child.
- Cubby storage units secured to the floor and wall to prevent tipping accidents.
- A 915 mm clear area in front of the cubbies for access.
- Seating, such as a bench, which may be integral with the cubby for either adult or child use.
- A parent bulletin board, locked tuition drop box, and parent mail box (located at the cubby area or in the reception area).

The size and type of cubby storage vary according to the age group of the classroom. It is also convenient to include a shelf for child safety seats, if space allows. It is more cost effective to purchase cubbies. (The designer must take care to verify the manufacturer's dimensions of cubbies recommended by the GSA coordinator. The design must coordinate with the build out to accommodate this purchased equipment.)

7.5.3 Infant and Young Toddler Cubbies:

Infants and young toddlers need storage for their diaper bags, clothing, and supplies. These purchased cubbies are typically approximately 305 mm wide, 305 mm deep, and 455 mm high. The bench in the infant area should be at about 380 mm above floor height for parents to sit while removing or putting on the child's outdoor clothing.

Parents may wish to leave collapsible umbrella strollers or other child-carrying equipment at the center during the day. Rods for this purpose should be provided here or near the reception area, but screened to avoid the appearence of clutter. Provide 230 mm to 255 mm of rod length per every five children and install at approximately 1370 mm to 1525 mm above the floor. If a double storage rod is needed, install the top rod at about 2130 mm and the bottom rod at about 1065 mm above the floor. Provide a retaining rail to keep the lower ends of the strollers in place.

7.5.4 Older Toddler, Pre-School, and Kindergarten Cubbies:

Older toddlers, pre-school and kindergarten children need to store bulkier outdoor clothing in their cubbies. Storage is required for satchels or backpacks used by children to carry personal items. Satchels and backpacks may be stored on hooks. Lunches brought from home must be properly stored for temperature maintenance and should not be stored in the cubbies.

Cubbies for this classroom should be a minimum of 305 mm wide, 305 mm deep, and 1220 mm high. Two hooks are needed in each compartment for hanging garments, and a shelf should be included for boxes, boots, or extra shoes. The bench in this area should be about 255 mm high for children to sit on while putting on their outdoor clothing and boots.

7.5.5 School-Age Lockers:

School-age children need to store outdoor clothing, books and papers from school, and other personal belongings in their lockers. These lockers may be stacked two high if space is limited. The open compartments should be a minimum of 305 mm wide, 305 mm deep, and 760 mm high.

7.5.6 Open Activity Area:

Each classroom must have an open, unrestricted activity area, clear of constructed elements. Teachers, along with the children, are ultimately the "architects" of this space. They can adjust and alter this flexible area in an ever-changing response to their needs and activities. This can be accomplished through the use of elements such as curriculum equipment

and materials, movable panels and demountable walls, fabrics, furniture such as seating or shelving, and display racks. The required space allotment for this area is found in Chapter 5.

Requirements for appropriate activities occurring within this space will vary according to the age of the children. Categories of play activities recommended by NAEYC are as follows:

- Discovery, including sand and water play
- Large motor activity
- Art
- Music
- Socio-dramatic for make-believe and role playing
- Reading/listening
- Manipulatives with small puzzles and finger toys
- Block building
- Woodworking
- Science, including nature study
- Math

Locate the open activity area within the classroom to take full advantage of natural light. Arrange the fixed elements along inside walls to reduce bottlenecks and maximize the natural light in the space. The design should encourage traffic pathways that avoid disruption and do not pass through activity areas. Wall or partition patterns with offsets will allow for more intimate areas for children while not obstructing teachers' views to the activity area. Preserve corner areas which provide natural boundaries to set apart an activity area.

Include the following architectural features in the open activity area for each age classroom:

- Acoustically treat surfaces as required to reduce noise.
- Supplement natural light with energy efficient, full-spectrum lighting, capable of being dimmed.
- Avoid acute or 90 degree right angle outside corners projecting into the space. Provide a 13 mm radius or beveled edge on all outside corners of constructed features and a 25 mm rounded outside corner drywall bead on walls.
- Ample counter areas at child height are needed for work surfaces and display areas. Consider a counter at a portion of the window area for growing plants and conducting nature studies.
- Allow for adequate electrical outlets (a minimmum of every four meters along walls to particularly serve counter areas), for items such as radios, tape players, televisions, projectors, and keyboards. Locate outlets for this kind of equipment,at a height of 1370 mm above the finished floor so that children cannot access the outlet or pull equipment off of counters by using cords connected to low-mounted outlets. A height of 1370 mm provides an adult wheelchair side approach.
- Consider how the child views his or her surroundings when designing the classroom. Spending time on the floor at a small child's viewing level is a helpful exercise for a designer of children's spaces.
- Furnishings consist of child-scale tables, chairs, and open storage units. Adult-sized comfortable seating is also needed. Bulletin boards and other display areas should be placed at children's height. Refer to Chapter 8 for a complete list of furniture, equipment, and applicable criteria. Continuous strips from which to hang children's art are strongly recommended. These may be strips placed at approximately 1000 mm to as high as 1370 mm above the finished floor.
- Allow for adequate storage of all curriculum materials and supplies required. Refer to the discussion on storage in this chapter.

7.5.7 Activity Area for Infants:

The infant open activity area offers all the opportunities for discovery and learning. This area must be a safe, soft, "print rich," stimulating environment in which babies can crawl, explore, and interact with their teachers.

Provide the following architectural features in the infant classroom:

- Furnish soft-surfaced level changes, either through constructed platforms or movable forms. This should be a soft, cushioned space with a variety of textures and coverings made from textile materials that can be easily removed for regular cleaning. Level changes should be slight with a maximum of 76 mm to 102 mm between levels. This should be a soft, cushioned space with a variety of textures and coverings. Level changes can be created using constructed platforms with ramps, or stacked upholstered blocks in various configurations. Maximum unenclosed platform height accessed by padded level changes is 455 mm above the floor. Refer to the discussion in 7.6 of this chapter for further discussion of platforms and lofts for additional information on level changes. An enclosed raised area for infants at 915 mm above floor

level should be considered so that they can be eye-level with seated adults and see the entire room.

- Nests and crawl spaces provide a safe environment which a baby can explore. These can be constructed with low, permanent, soft barriers, or movable objects.
- Furnish mirrors at floor level for babies to see reflections. Approximately 455 mm minimum height from the finished floor is recommended. Mirror material must be shatterproof: safety glass, acrylic, or reflective metal. Edges must not be able to cut or puncture skin.
- Furnish low grab bars at 455 mm above floor level to aid infants in pulling up to a standing position. These bars also may aid an infant's sense of security while developing walking skills. A minimum total length of 1525 mm is to be provided in each infant classroom.
- In order to meet licensing requirements in some states, carpet is not allowed in infant rooms. Floors that are not padded shall be a material tile, linoleum, or wood in order to be mopped and sanitized daily. Soft areas can be provided using area rugs, floor mats, etc., provided they have anti-slip surfaces to prevent accidents.
- Furnish views to the outside and to the circulation pathways from floor level, if possible.
- Consider a baby's point of view and furnish interesting things to observe. These include views from adult seating and standing height while the child is being held.
- Refer to Chapter 8 for a list of furniture and equipment supplied for this area.

7.5.8 Activity Area for Toddlers:

The toddler open activity area should offer an even greater range of opportunities for exploring and greater challenges in developing large motor skills. Toddlers have just learned to move very quickly, often in groups of two or three. The activity area must allow for running and cruising (movement through the space to view and select from a variety of activities) without disrupting children in other activities. Provide the following architectural features in the open activity area for older toddlers:

- Design broader pathways to accommodate group movement or cruising.
- Furnish intimate spaces for toddlers which still retain visual connection with the teacher.
- Hard surface, impervious flooring shall be provided throughout. If the initial design meetings present a strong predilection towards carpet, particularly for quiet areas, then a limited amount of area carpets with non-skid backing and mats will be provided by GSA for these areas. See Section 9.3.2 for indoor air quality requirements for area carpets, rugs, and mats.
- Allow for sand and water play which might consist of freestanding tables or troughs with nearby hooks for smocks and towels. An impervious floor finish must be provided. Provide a floor drain, if feasible. (This may not be feasible in an existing center.) Sand and water play can occur in the art sink area. Art sinks shall be provided for older toddlers but not young toddlers.
- A listing of furniture and equipment for this area is found in Chapter 8.

7.5.9 Activity Area for Pre-School Children:

The pre-school open activity area is larger than the younger children's due to the greater number in this group and their increased energy level and variety of activities. Pre-school children are involved in a wide range of activities, and their level of skills enables them to take part in more advanced activities, requiring a greater number of interest areas configured for small groups of children in each area. Provide the following architectural features in the pre-school classroom:

- Allow for maturing skills in large motor development. Refer to the discussion on lofts and platforms in this chapter.
- Allow for sand and water play which might consist of freestanding tables or troughs, with nearby hooks for smocks and towels. An impervious waterproof floor finish and a floor drain is required where feasible. Sand and water play can occur in the art sink area or outside.
- A listing of furniture and equipment for this area is found in Chapter 8.
- Hard surface, impervious flooring shall be provided throughout. If the initial design meetings present a strong predilection towards carpet, particularly for quiet areas, then a limited amount of area carpets with non-skid backing and mats will be provided by GSA for these areas. See Section 9.3.2 for indoor air quality requirements for area carpets, rugs and mats.

7.5.10 Activity Area for School Age Children:

The school-age open activity area needs to allow free movement within the space. More cooperative play can occur in this classroom, such as group activities and games. Children of this age have a higher level of development which enables them to take part in a wider range of activities.

- Provide a quiet area within this space for children to do homework. An area for reading should be provided with natural light and a quiet environment with natural light.
- The activity area should be large, open, and flexible.

- School-age children require ample table space for games and projects.
- Storage is required for games and supplies.
- School-age children in summer programs often go on excursions and use the classroom mostly for a staging area.
- A listing of furniture and equipment for this area is found in Chapter 8.

7.6 Lofts/Platforms

Lofts and platform areas are optional constructed or purchased elements within the classroom. These areas can offer many activity opportunities and advantages. Lofts must always be designed or positioned with the safety of the children in mind. As of this writing, ASTM requirements for multi-purpose rooms and other areas designated for lofts or other raised play equipment are under discussion. Under these requirements, if adopted, these areas must have impact-attenuation surfacing rated for the height of the equipment to be placed thereon. This impact absorbing surfacing is usually in the range of 38 mm thick but varies with maunfacturer. If the requirements are adopted by ASTM in new buildings, the floor construction should be recessed to accept the material so that it is flush with surrounding floor finishes. Surfacing must extend beyond raised equipment if required by CPSC and ASTM. In existing construction, transition pieces are needed to accomodate existing surrounding floor elevations. Typically, apart from built-in riser "stages," lofts will be purchased pieces of equipment that the A/E will accommodate in the design. It is the A/E responsibilty to ascertain the status of these ASTM proposals and comply, if required. Lofts with slides and steps offer variety of experience; however, it is best for circulation and program if they are sized to accept the play of two children at once on the slide and are arranged so that steps and slides are located descending in the same direction. Consult with GSA RCCC on selection of the purchased lofts. See Chapter 10 for technical requirements for automatic sprinkler systems where lofts cover a space occupied by children.

7.6.1 Infant Lofts and Platforms:

Infant classrooms require soft, colorful crawling areas with low level changes such as low, carpeted, constructed platforms; movable foam shapes; or forms that provide level changes. Ramps, or small 76 mm to 102 mm steps, should be used between level changes. All corners should be rounded and all surfaces should be soft and forgiving of falls. The maximum total height of platforms for infants is 455 mm.

Recessed constructed areas provide infants with large, contained spaces in which to move about and explore. The low retaining sides allow infants to pull up and move. Similar portable low boundaries might work as well. Caution must be used in permanently constructing such an area so that it will reduce classroom flexibility.

7.6.2 Toddler and Pre-School Lofts and Platforms:

Lofts enhance toddler and pre-school classrooms by offering:

- Challenging, large motor activities
- Small intimate spaces
- Additional spaces for exploration
- Opportunities for a child to view the environment from another level
- A classroom with more character

The following design requirements must be considered in the design of a loft for toddler and pre-school age groups.

- Lofts must be no higher than 915 mm above the finished floor for toddlers and 1370 mm above the finished floor for pre-school children. Lofts should be designed to minimize conflict; allowing more than one child to use equipment at any one time. For instance, offering stairs going up and a slide coming down will minimize congestion and the resulting possibility of conflict.
- Loft features meeting the definition for fall zones must be provided with resilient surfaces as prescribed by the Consumer Product Safety Commission's *Handbook for Public Playground Safety*. Please refer to Chapter 6, Play Yard Surfaces.
- Lofts must meet the construction requirements of the latest edition of GSA's Facilities Standards for the Public Buildings Service and other Federal standards that may apply.
- Guardrails must be provided to protect children from falling from raised areas. Toddlers must have guardrails on any constructed surface greater than 250 mm above adjacent surfaces. Pre-school children must have guardrails on any raised surface greater than 505 mm above floor level.[1] The top of the guardrail must be at least 760 mm above the platform. Openings between 88 mm and 229 mm must be avoided to prevent head entrapment. There can be no openings between 9 mm and 25 mm to prevent finger/hand entrapment. Guardrails must also meet the requirements of the latest edition of the National Fire Protection Association, Life Safety Code.
- Protective barriers must be provided on all raised surfaces 610 mm above floor level or higher for pre-school and younger children.[2] Pro-

tective barriers can be vertical slats or, preferably, acrylic panels (for clear visibility). Openings in these panels should not be greater than 76 mm to prevent entrapment. Avoid using horizontal rails that allow climbing.

- All protruding corners must have a minimum radius of 13 mm.
- Teachers must be able to see and easily reach all areas of a loft.
- The loft should present an image of safety, avoiding over-stimulating elements such as cantilevers, narrow bridges, or other elements that present overly-challenging activities.
- Design level changes appropriate to the age group and accessible by ramps, steps, or ladders. Steps and ladders should allow two children to use them at the same time to avoid aggressive behavior. Riser heights for stairs should be approximately 125 mm for toddlers and pre-school children. Minimum tread depth is approximately 280 mm. Stairs and ramps must be a minimum of 915 mm wide.[3]

Provide handrails for all stairs and ramps at 550 mm above the leading edge of the treads. All handrails must return to the wall to avoid the possibility of injury. Handrails must also meet the requirements of the latest edition of the National Fire Protection Association, Life Safety Code. At the time of this writing, ASTM is preparing new standards which may alter these standards. Consult the most current ASTM at the time of construction or purchase of equipment.

7.6.3 Art Sink:

In toddler classrooms, provide a stainless steel sink with a goose neck faucet and wrist handles mounted in a 555 mm high counter for children to use in art and other activities requiring water and cleanup (such as sand and water play). For pre-school and school-age children the sink height should be 650 mm. The sink arrangement should have a goose neck faucet to allow teachers and children to get a bucket under the faucet. Traps should be easily accessible for clean-out but not accessible to children. The art sink area should include art supply storage, display, and drying areas for finished work or work-in-progress. The counter should be 455 mm to 505 mm deep, allowing children to reach the faucet. Provide 915 mm to 1220 mm of open counter length adjacent to the sink. Provide an adult height art sink in all toddler and preschool classrooms at 865 mm A.F.F. Faucets and levers should be located behind the sink adjacent to the wall rather than at the side of the sink. Faucet controls should be no less than 350 mm from the leading edge of the counter. See Section 10.4 Accessibility for reference to ADAAG-required heights of elements for the disabled child.

Locate the art sink next to the eating/table area because most art activities require similar tables and finishes. This sink should be close to display walls equipped with dry marker boards or chalkboards. Provide sheet impervious floor coverings with sealed seams and using a floor drain in this area, if feasible. Built-in counters, especially with a configuration that allows children to face each other during activities, should be included. A shatter-proof mirror above the counter is a desirable feature.

7.6.4 Toilets and Sink:

For toddlers and pre-school children the plumbing requirements are as follows:

- A minimum of two toilets and two child-height hand washing sinks within each classroom area that uses the toileting facility, with never less than one toilet, one lavatory and one drinking fountain for every 12 children who will use them (where allowed by licensing). Note: two classrooms may share one toilet area.
- Toddlers: A minimum of two adult sinks, one for diapering in the toddler room, and one in a separate area for food preparation.
- Preschoolers: A minimum of one adult sink and one to two hand washing sinks for every ten to twenty children with a connection for water play.

Until kindergarten, these toilet areas are used by both girls and boys, and are partially screened but without doors. This offers some privacy, but still allows adult supervision. Toilet areas are to have gates or half doors at entrances and may have child height partitioning between toilets. As with all full height doors, these elements must have hinge protection so that children's hands and fingers are not accidentally pinched or crushed.

Kindergarten and school-age children must be provided with private toilets and sinks with separate facilities for boys and girls where more than one toilet is provided. These facilities should be accessible from the classroom and they must have doors for privacy. Note that each toilet room must meet ADAAG requirements.

Teachers in older toddler and pre-school rooms are provided an adult toilet located outside the classroom. An adult toilet is to be provided within or nearby infant and young toddler classrooms.

Toilets located within the classrooms should typically be placed toward the interior perimeter to leave the exterior free for access to natural light and

views. They are constructed as part of the fixed elements, and should share plumbing walls with other areas requiring plumbing connections, to the extent possible. The toilet area must be physically separated from food preparation and eating areas and partially screened from the view of remaining spaces. Hand washing sinks may be located within the toilet area or in the adjacent classroom for ease of supervision and to lower the amount of congestion that can occur in the toilet, especially before meal times. Some states require sinks in the toilet rooms.

Toilets are to be child-size for toddlers, but may be adult-size for pre-school children. They must be accessible to children with special needs. Toddler and pre-school toilet areas should be durable, with water-resistant finishes and bright, cheerful lighting. Recommended flooring includes ceramic tile with integral cove base and a ceramic tile wainscot to 915 mm above the floor with painted wall above.

Required features of the toilet area include:

- Toddler's toilet seat height of approximately 280 mm (including seat). (Preschoolers who are four to five years old may be able to use adult sized toilets.)
- Floor drain.
- Toilet tissue dispenser next to toilet.
- Exhaust ventilation.

Required features of the hand washing sink include:

- Sink mounted at 555 mm above floor. Counters at 455 mm to 505 mm deep, allowing children to reach controls. Junior-height wash fountains may also be used with a wash basin rim height of approximately 635 mm.
- Hot water temperature controlled to a maximum of 43°C. Hot water heaters should be placed where they are not accessible to children.
- Soap dispensers at each sink.
- One paper towel dispenser per sink area. Metered roll dispensers are preferred. The dispenser should not have a serrated edge which could cut children. The designer should consult with GSA building management and the RCCC to verify whether folded goods are preferred. Even though rolled goods are usually more economical and environmentally sensitive, some existing centers have noted that children often waste significant amounts of rolled goods because they lack the coordination to tear rolled paper easily.
- One freestanding pedal-operated waste receptacle per sink area. Do not use metal receptacles with any sharp edges
- Do not use built-in waste receptacles.
- Safety mirrors mounted at child height.

7.6.5 Diapering Station and Storage Areas:

A diapering station and diaper storage area is needed in each classroom serving infants or toddlers. Locate this area in an easily accessible, central location, but separate it from food preparation and eating areas. Orient the diapering station so that a teacher, while diapering a baby or toddler, can maintain visual supervision of the children, and the children can see the teacher. This component should be constructed as part of the fixed elements within the classroom for economy of plumbing connections.

The diapering station and storage area consists of a changing table, countertop with sink, waste bin, and upper storage cabinets for diapers and other supplies. All equipment and storage needed for this area must be within easy reach for the teacher at the changing table, without requiring them to move away from the infant. They should all be very easily cleaned and non-porous.

The diapering station should be designed to reduce possible transmission of blood-borne pathogens. The table should be easily sanitized or sterilized, and all material contaminated with feces should be stored in a hygienically safe manner in sealed receptacles. Specific equipment at the diaper station includes:

- Changing table: A changing table should have an impervious surface. The top surface should be at the height indicated in Figure 7.1. There must be a safety device on either side of the baby consisting of, for instance, a solid rail to provide side restraint for 120 mm above the surface of the table. Since mats are typically 25 mm thick, this means that the top of the rail should be approximately 100 mm above the surface of the changing table. The table should be dimensioned as per Figure 7.2. It should have a waterproof covered pad. (Check with local licensing for possible additional requirements.)
- Hand washing sink: The sink should have sloped sides and be within reach of the changing table. It should have hands-free or wrist-blade faucet controls. Diaper sinks should not have goose neck faucets because this type causes more splashing than standard faucets.
- Paper towel, soap, and rubber glove dispensers: These fixtures should be within reach of the teacher at the changing table.

- Open compartmentalized upper cabinets should be approximately 230 mm wide, 230 mm high, and 305 mm deep.
- Waste storage for disposable diapers must be in a waterproof, washable container with a disposable plastic liner. The waste storage must be covered with an air-tight lid. It must be within reach of the teacher at the changing table and be operable without utilizing both hands. A pedal-operated waste container may be used, placed under the counter out of reach of children. If both cloth and disposable diapers are used, separate containers must be provided.
- Movable or retractable steps are necessary to help toddlers up onto the changing table. Steps are also particularly helpful for caregivers whose backs are often challenged by excessive lifting when there are no stairs for this purpose. Check with regional coordinators for advice about purchasing changing tables with integral, retractable steps.

The diapering station requires exhaust ventilation and should be free from drafts (see Chapter 10). A separate zone or a ceiling-mounted unit heater should be provided at the changing table to maintain a temperature 1.5°C to 2.5°C warmer than the rest of the classroom. Recommended finishes include impervious flooring and millwork, countertops, and wall splash. Wall surfaces adjacent to the changing table should have impervious finishes. Because disinfectants are used to clean the changing table surface, finishes must be unaffected by these cleaning products.

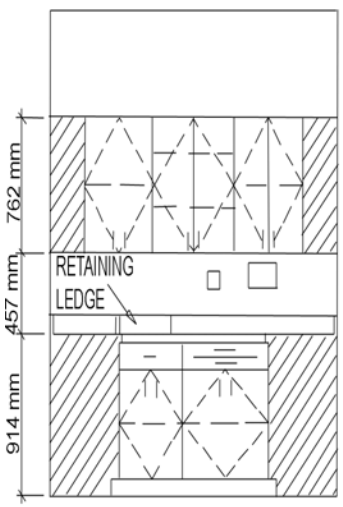

ELEVATION

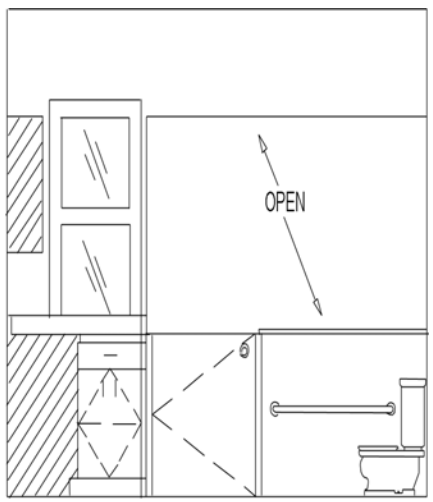

ELEVATION

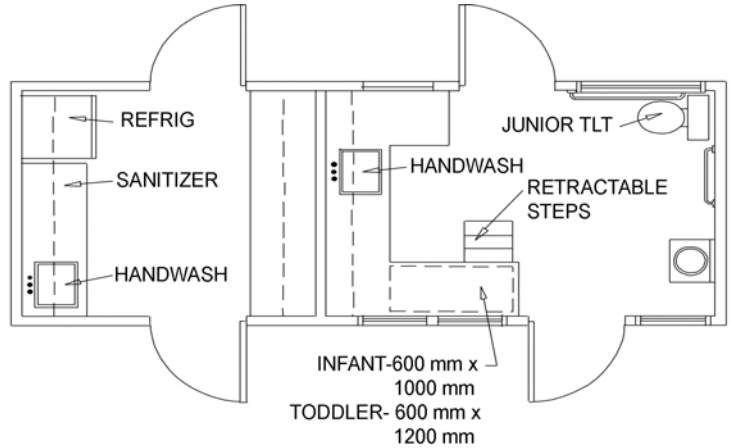

DIAPERING/FOOD PREP AREA (EXAMPLE)

7.6.6 Sleeping and Napping Areas:

Special areas for sleeping are provided in infant rooms, and often in young toddler rooms. Generally, there is not sufficient available space to allow for separate napping areas in older toddler and pre-school classrooms.

Infant sleeping areas should be quiet and pleasant in a somewhat separate space within the classroom where infants can sleep according to their individual schedules. Teachers must have visual and acoustical accessibility to this area at all times. Locate sleeping areas away from active areas. Separate this area with partial walls that are no higher than 1220 mm high. Do not install glass above as this may qualify the nap area as a separate sleeping area. Some licensing authorities would then require a teacher to be stationed in the nap room in such a case. Allow ample space for one crib per infant, placed 600 mm apart. When designing this area, the A/E must dot in cribs on all drawings even though GSA will provide them. This precaution will help ensure that the nap room will not only be correctly sized, but also be configured properly to accommodate the necessary number of cribs.

Recommended finishes include carpeted floor and painted walls above an impervious wainscot or a washable, glossy paint or other washable surface. Lighting must be capable of being dimmed. Exterior windows require window treatment to control direct sunlight.

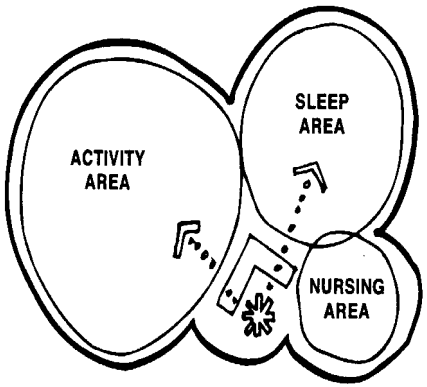

Figure 7.3: Infant Room Spatial

A crib must be provided for each infant and young toddler. One of every four cribs must be an evacuation crib, especially constructed for this purpose, equipped with 100 mm wheels, and capable of holding and transporting up to four infants.

The evacuation crib(s) should be placed closest to the emergency egress point and must be capable of easily passing through a 915 mm door. (Coordinate opening requirements with evacuation crib manufacturers.)

Older toddler and pre-school classrooms will not have space allocated for a sleep area, but will provide for napping cots which are stored within the classroom when not in use. A few cribs may be needed in a toddler classroom, but a separate sleeping space will not always be possible. Specific areas for cot/mat storage are required.

7.6.7 Nursing and Lactation Area:

A quiet, semi-private area in the infant classroom may be provided for a mother to visit and nurse her infant or for lactation purposes. Locate this space near the sleeping area with some visual separation from the other areas of the classroom and privacy from the circulation pathways. This space should be located near a sink and be as comfortable as possible, with adjacent counter space and a carpeted floor. Furnishings include at least one comfortable chair.

7.6.8 Food Preparation:

All children will eat in their classroom with their teachers. A food preparation area must be provided in infant and young toddler classrooms for the purpose of storing and heating individual bottles and other prepared food brought from home.

Older toddlers, pre-school children, and school-age children are provided lunches and snacks, and do not require a food preparation area in the classroom. Their meals are prepared elsewhere through one of three methods: catered food service, on-site preparation, or lunches brought from home. All lunches brought from home must be appropriately stored with proper temperature maintenance.

Locate infant and young toddler food preparation areas with other fixed elements within the classroom. This area must be adjacent to the eating/table area and separated from the diapering station, toilet, and hand-washing areas. Place food preparation areas near activity areas, providing teachers with clear views of the classroom. No food preparation area may be located under sewer or drain pipes concealed in the ceiling plenum above.

The food preparation areas in classrooms include the following heavy duty items:

- Upper and lower washable cabinet storage. Provide child-proof latches or locks to prevent child access to any storage within reach.
- Counter area. Provide an adult-scale impervious counter, a minimum of 2440 mm long with a back splash. Top of counter is to be 865 mm high. Drawer and door pulls should be non-projecting types. Hinges are to be heavy duty and durable as they receive intensive use in a child care center. One cabinet must be lockable.
- Sink. Equip the sink with a single-lever faucet, spray hose, and garbage disposal. Limit the hot water temperature to 43°C.
- Microwave oven.
- Bottle warmer, such as a crock pot.
- Refrigerator. Provide a minimum of 0.25 m cubed (8 cubic feet) of refrigerator storage. Provide a lockable box in each refrigerator for storage of medication. Refrigerators should be EPA Energy Star labeled for high-efficiency.
- Recommended finishes include impervious flooring and gloss painted wall above an impervious wainscot, for example, ceramic tile. Fiberboard substrates for plastic laminate cabinets and countertops should have little or no formaldehyde emissions. Use post formed counters with integral coves and bullnose.

If possible, use agrifiber boards, such as straw board, for cabinets and counter substrates, and alternate more durable counter top materials. Ceiling tile should have washable facing.

7.6.9 Eating/Table Area:

Meal and snack times in the classroom are opportunities for children and their teachers to enjoy social interaction in small groups, much as the family might do in the home. A parent may join the child at the table to share lunch time.

Usually, this area is part of the open, unrestricted portion of the classroom and is used for other activities during the day.

Infants are held during bottle feeding while older infants who are able to sit may be placed in a low highchair while being fed soft foods. Traditional highchairs are not recommended due to risk of falling and tipping and the reduced opportunity for social interaction. Provide low stools for the teacher to sit on while feeding older infants. Provide a gliding chair or other comfortable chair for the teacher to sit in while bottle feeding. Locate the infant eating space near the food preparation, away from the open, unrestricted area where other infants may be moving about. Young toddlers may be seated at the same round table.

Locate eating/table areas for older children in a central location, away from children's toilets and hand washing sinks, in a pleasant area with natural light and lots of displayed items of interest, such as plants. For toddlers and older children, the eating/table area is part of the general activity space.

Children older than infant age need movable chairs and tables of appropriate scale for their eating area. Storable tables might be used so that the room can be changed to accommodate other activities. Each toddler, pre-school, and school-age classroom must provide a separate, room-temperature drinking fountain, preferably in the eating area (check local licensing). Mount the drinking fountain at 560 mm above the floor in a central location on a plumbing wall for toddlers. For pre-schoolers, and in general areas, mount at 810 mm.

Recommended finishes for the eating/table areas include sheet vinyl flooring and a vinyl wall covering or high gloss, washable painted wall.

7.6.10 Child-Accessible Display:

Shelving placed low to the floor allows children to easily see available curriculum materials and to make selections. These materials may be items such as books, art supplies and equipment, manipulative toys, large or small blocks, pull or push toys, and socio-dramatic materials. Open shelving, approximately 405 mm deep by 760 mm high, functions well for this purpose. Small items requiring further organization can be placed on this shelving in containers such as plastic tubs, or wire or wicker baskets. Shelving can be built-in millwork or freestanding movable units. Where appropriate, shelving open on both sides should be considered as it creates more open feeling in the classroom. If shelving backing is used it should be attractive and useful. For instance, it may be mirrored with nonbreakable reflective material. The movable units lend greater flexibility, though they must be equipped with locking casters. A combination of built-in and freestanding units will offer the best design solution. It must be noted that some state and local codes may require these units to be fixed to the floor.

7.6.11 Classroom and Teacher Storage:

It is essential for classroom design to include adequate storage for the many items required for a quality program. Nothing conveys a more cluttered, chaotic, and shoddy impression than inadequate storage. This is often overlooked. Storage for cots, strolling equipment, curriculum materials, and supplies is necessary. Use of doors on storage areas should be minimized for several reasons, including finger entrapment and the greater possibility of abuse when there is inadequate supervision. When doors are deemed necessary, they must have full vision panels and their hardware should always allow a child trapped there to exit when the door is locked from the outside. Alcoves (without doors) can function well for storing the kinds of cots which have been designed to be stackable and are attractive enough to leave exposed.

Provide some lockable storage within the classroom, including some cabinets elevated above children's reach or with a door to limit their access. There is to be one lockable cabinet in each run of cabinets. This storage area is required for storing classroom equipment, materials, and supplies. Hooks and pegboards can provide easy storage of aprons and small equipment. Other areas of storage might include overhead storage in a food preparation area. Provide a lockable cabinet, above child's reach, for storage of items such as medications, cleaners, and other restricted items. Refrigerated medications will be stored in the refrigerator at the kitchen or food preparation area in a locked container.

7.6.12 Teacher Storage:

Some lockable storage must be provided in the classroom for teachers to store outdoor clothing and other personal belongings. This storage may be provided in the storage area or in cabinets intended for the teacher's

use. A teacher closet with a rod for hanging coats and shelving above it is preferable. In addition to the spaces required in the classroom, discussed below are spaces located elsewhere in the center, which provide specialized activity settings for use by children, teachers, and parents. These areas should not be considered part of the minimum activity square footage area required in the classroom.

7.6.13 Multiple-Purpose and Large-Motor-Activity Spaces:

If space is available, consider providing a versatile, large, open area for activities. Such spaces are less important where climate is temperate enough to allow extensive use of the exterior and a play yard is available. A multi-purpose room is mandatory where climate forces gross motor activity, that would occur typically in a play yard, to take place indoors. The space can also be used for group gatherings or meetings. Locating the multi-purpose room near the kitchen and including a pass through can increase the versatility of the room. Multiple-purpose space should be flexible enough to offer a variety of opportunities for large motor activity. Multi-purpose space must also be provided if adequate outdoor play yard space is not available in the short term but should never be considered an adequate permanent substitute for exterior play. Play equipment should be carefully considered to ensure that it will work well within the confines of an enclosed room which may have features, such as sprinklers and pendant-hung lighting fixtures, to be accommodated. Windows are of less importance than in classrooms, although natural lighting from non-breakable skylights would be highly desirable, as well as energy efficient. The space may have movable partitions or perhaps a carpeted, raised area for dramatic play. Acoustical treatment may be required to reduce noise level *(see Chapter 10.6).*

Provide the following architectural features in the multiple-purpose area where possible:

- High ceilings.
- Acoustical treatment on walls and ceilings, together with possible acoustical separation between the multi-purpose and the adjoining rooms.
- Impervious flooring. If carpeted areas are desired for soft areas, they should be provided by non-slip areas rugs.
- A hard, durable, washable surface as wall finish.

The following architectural features and equipment are required for large motor activities:

- Play equipment
- Protective resilient surfaces in fall zones
- Hard surface pathways for wheeled toys
- Storage for equipment and supplies

7.6.14 Sick Bay:

The sick bay, which must be able to be supervised by the director or assistant director, is used for temporary isolation of ill children until they can be taken home. In some locations a sick bay is required but, in fact, they appear to be rarely used. Typically, a sick child will wait on a cot in an alcove adjacent to the center director's office, if state licensing allows, rather than being secluded.

If the sick bay is a separate space, locate it adjacent to the director's office and near a toilet. Provide a cot or bed with a night light. This area should have simple, pleasant, cleanable finishes, and lockable storage for first aid supplies. A bookshelf for the storage of books and toys would be appropriate. A view to the exterior is preferred.

7.6.15 Service Spaces:

Spaces for service areas such as kitchen, laundry (with adequate storage and counter space for separating clean and dirty laundry), janitor's closet, and telephone equipment room should be located to the rear of the facility near the service entrance, removed from children's activities. Major food staging and serving activities should be centralized in a kitchen area. The service areas, in general, should not be accessible to children, although children can be provided views of interesting activities occurring in the kitchen. For example, it is desirable to locate the multi-purpose area near the kitchen, which makes it easy for children to work on cooking projects (such as making cookies and placing them on baking sheets). Such an arrangement also provides a venue for group lunches and other gatherings. The kitchen should be located near the pre-school classrooms since these children are primary users of the kitchen.

7.6.16 Kitchen:

The type of food service that will be provided for the center impacts the scope and size of the kitchen area. Reference requirements of centers locality. If the center includes commercial kitchen equipment, a wet chemical extinguishing system shall be installed in accordance with the requirements

of GSA's Facility Standards for the Public Buildings Service. In addition, it is recommended that a food service specialist be consulted as part of design services.

The baseline in this Guide provides a kitchen with heavy duty equipment that will function primarily only to prepare simple meals and as a staging area to receive catered meals. Large centers may have two kitchen areas. Typically, the A/E should not design a commercial kitchen on a scale which may require sophisticated venting and hood-mounted fire suppression equipment.

Especially in existing buildings, this type of commercial kitchen could force expensive modifications that could severely impact the rest of the building, which would not be feasible. For instance, in a multi-story building, it may require openings through several floors as well as through the roof structure to accommodate a kitchen exhaust.

The kitchen should be accessible to service personnel, staff, and other adults. For safety reasons, children will not be in this space unless escorted by an adult and dangers such as hot oil are not present. The kitchen should be placed in a central location with access to the service entrance, near the multiple-purpose area, and separate from the classrooms.

The following equipment should be provided:

- Stainless steel, three-compartment, deep sink with required plumbing, faucets with hot and cold water connections near the dishwasher. Goose-neck is recommended.
- Separate hand washing sink.
- Garbage disposal with required plumbing connections.
- Floor drain.
- Heavy duty, commercial-type dishwasher/sanitizer.
- Commercial-type refrigerator storage at or below 4°C and freezer storage at or below -18C. (Many centers will require two refrigerators and one or two commercial freezers. This needs to be clarified during initial design meetings.)
- Microwave oven(s).
- Convection oven.
- Residential range. (Commercial preferrable, but check with local code requirements if commercial is used.)
- Adequate 610 mm minimum deep counter space.
- Storage for dry food, equipment, and supplies on open wire metal shelves. A can rack for large canned food items is desirable.
- Recycling bin.
- Commercial-type kitchen equipment with highly washable finishes such as stainless steel.
- "Dietitian corner" with telephone to use when ordering food.
- Ample, easily washed, metal cabinets with interior shelving within reach of cooks.
- Stainless steel countertops and highly washable, seamless wall surfaces made for kitchens.
- Impervious, durable, easily cleaned floor finish.
- Washable ceiling finish.

It is vitally important to provide space for two or more stainless steel food carts. Adequate lighting, ventilation, and clearances are required. Locked storage for any hazardous materials must be provided. For food not requiring refrigeration, provide clean, dry, well ventilated storage off the floor. Shelving in kitchen areas should not be exposed wood as this is difficult to clean adequately. Metal wire shelving is the best choice for this purpose. Provide storage for all utensils and equipment off the floor in a clean, dry, closed space. No sewage or drain pipes are allowed above food storage, preparation, or service areas. Ample electrical outlets (with ground-fault interruption in wet areas) out of children's reach, must be provided.

7.6.17 Laundry:

The laundry room should be accessible only to adults. Locate this area near the infant/toddler classrooms, if possible, and convenient to the food service areas. For acoustical purposes and to ensure adult controlled access, locate the laundry room away from children's areas and provide a lockable door (that can be opened from the inside). Ideally, the laundry room should be located close to an exterior wall to minimize the run of the dryer exhaust vent to the exterior.

Note: Dryer exhausts contain combustible lint which can present a fire hazard when the exhaust vent is excessive. Dryers must be vented separately and not be combined with other building exhaust systems.

Recommended equipment includes a heavy-duty residential-type washer and dryer. Large centers may require additional equipment. Provide an

electrical power outlet, venting, plumbing connections, floor drain, deep sink, and millwork with closed, lockable storage. If space and budget allows include a dishwasher in this area to wash toys that are often soiled from being in children's mouths. There must be a counter for folding clothes and wall lockable cabinets for cleaning supply storage.

7.6.18 Janitor's Closet:
Service personnel and staff use this space for storing janitorial supplies and equipment. Include a mop sink with plumbing connections and storage for pails, mops, vacuums, and related cleaning supplies and equipment. The door should have a lock (which is able to open from the inside without a key) and cabinets for cleaning supplies which must be lockable. Provide exhaust ventilation. Special fire safety and ventilation requirements for janitor's closets can be found in Chapter 10.

While isolated from children's activity areas, janitor's closets and maintenance facilities should be designed to maintain convenience to cleaning and maintenance staff. To protect indoor air quality from the potential impact of cleaning and maintenance activities, provide the following:

- Fully enclosed areas with separate outside exhausting, no air recirculation and negative pressure where chemical use occurs, as described in LEED Version 2.0.
- Automatic chemical mixing dispensers to assure correct dilutions of cleaning materials.

7.6.19 Service Entrance:
A key-access service entrance is needed by service personnel to deliver food and supplies and for trash removal. This entrance should be accessible to maintenance and kitchen staff. Locate the entrance next to service areas, away from the front entry and children's activity areas.

7.7 Mechanical/Electrical/ Telephone Equipment

Except when centers are free-standing buildings, mechanical equipment typically will be provided by the main buildings central plant. When free-standing, interior space must be provided for mechanical equipment split systems or rooftop equipment will need to be used. However, the decision to use rooftop equipment should be carefully weighed by the designer. The decision should not be based on first cost alone, due to the additional maintenance and possible damage to the roof that this configuration entails. This precaution is particularly applicable to regions of the country with significant precipitation. GSA is particularly interested in equipment and systems which will have low long-term operating and maintenance costs.

Space for telephone service must be centrally located and separate from the children's areas, although a dedicated telephone closet is not always necessary. Typically a 900 mm x 900 mm backboard will suffice.

If a room is provided for mechanical/electrical/telephone equipment, it should have a lockable door that is not accessible by children (but will also not allow children to be locked inside). Finishes include painted walls and a sealed concrete floor.

7.8 Design Features to Avoid

The following is a short list of center features that have been found to be impractical or not conducive to the desired environment. These are undesirable conditions that are most commonly observed, but the list is not exhaustive:

- Excessive areas of fixed carpet.
- Sinks that are not deep enough or movable faucets that allow water to flow onto the adjacent counter instead of into the sink.
- Shelving which is too high for caregivers to reach.
- Excessive amounts of space devoted to toilet area because separate ones have been provided for each classroom (as opposed to shared toilet areas *between* classrooms).

Note: When separate toilet rooms are provided, ADAAG-mandated wheelchair clearance must be allocated in *each* toilet room. Thus, instead of

providing clearance once in a *shared* toilet room, the same clearance must be provided twice in *separate* ones. This is not an economical use of built space.

- Cubbies that are lined up facing into the classroom: this condition wastes precious classroom wall space and creates a chaotic visual impression.
- Solid interior doors that do not allow for necessary supervision.
- Inadequate or improper storage, creating crowded, chaotic-looking classsroom environment. Note that large central storage rooms will not solve the center's storage problems alone. Instead, wall-mounted cabinets and closets close to children's activity areas in the classroom are essential.
- Diapering areas that face walls and do not allow supervision while diapering.
- Undimmable, ceiling mounted institutional troffer-type fluorescent light fixtures with poor color rendition, such as those typical of office space, together with a lack of other light sources for task lighting.
- The use of 90 degree or acute angled walls (in plan) where an obtuse angle would be safer and easier to negotiate.
- Windows mounted too high for children to view out (or in existing space, with no risers to allow accessing the view).
- Long Dead-end Corridors. The designer should strive to maximize efficiency and not devote unnecessary, precious area to solely utilitarian circulation. Corridors that must be lengthy because of site configuration, for example, need stopping, cuing and socializing areas along the way.
- Inadequate natural light.
- Misuse of color. Either overly stimulating, overly bright, or dark and oppressive wall colors. These mistakes usually result from over reliance on sample color chips. <u>All colors should have large-scale samples completed and approved before final color decisions are made</u>. Avoid primary red and orange particular.

[1] HANDBOOK FOR PUBLIC PLAYGROUND SAFETY, U.S. Consumer Product Safety Commission
[2] Ibid
[3] HANDBOOK FOR PUBLIC PLAYGROUND SAFETY, U.S. Consumer Product Safety Commission

CHAPTER 8:
FURNISHINGS AND EQUIPMENT

8

8.1	**General Criteria**	**8-1**
8.1.1	Storage	8-1
8.1.2	Upholstered Furniture	8-2
8.1.3	Chemicals	8-2
8.1.4	Storage Units	8-2
8.1.5	Seating	8-2
8.1.6	Tables and Chairs	8-2
8.1.7	Countertops	8-2
8.2	**Play Yard Equipment**	**8-2**
8.3	**Furniture and Equipment List**	**8-3**

CHAPTER 8: FURNISHINGS AND EQUIPMENT

This chapter provides general criteria regarding furnishings and equipment for the center, including references to applicable codes and regulations. At the end of the chapter is a list of the furnishings and equipment that may be provided by the Federal Government as part of the baseline provisions.

8.1 General Criteria

General criteria recommended by NAEYC for furnishings and equipment are as follows:

- Age appropriate.
- Sufficient quantity.
- Sufficient variety.
- Durable.
- Readily accessible.

Additional general criteria for center furnishings and equipment are listed below:

- Child-scale for child use.
- Adult-scale for adult use.
- Safe.
- Able to be easily cleaned.
- Adaptable, flexible, movable.
- Dual purpose, where appropriate.
- Stackable/hangable, if possible.
- Do not convey an institutional impression.
- Soft and "cushy," where appropriate.
- Optimize the use of natural materials. Furnishings should contain minimal amounts of formaldehyde and other chemicals which may affect children (particularly those with allergies).
- Texture rich.
- Calm, soothing, coordinated color schemes.

Furnishings and equipment within the center shall meet all applicable codes and standards. Where synthetic materials are used, use products made with recycled content, avoid finishes with polyvinyl chloride (PVC) content to the extent possible. The following have established criteria pertaining to play equipment for all age groups of children which must be referenced.

- Consumer Product Safety Commission
- American Society for Testing and Materials (ASTM) for Juvenile Products (1487-1-F 15.29, F1292-99,F1951-99,F2049-00, 36 CFR Part 1191)

Below is a reference list of ASTM requirements specific to a child care center. Refer to the most recent standards.

- Chairs with high sides or foam nests for infant feeding - ASTM F-404
- Cribs - ASTM F-966 and ASTM F-1169
- Carriages/strollers - ASTM F-833
- Gates/enclosures - ASTM F-1004
- Hook-on chairs - ASTM F1235
- Toy safety - ASTM F-963

Evacuation cribs are required for all infants and, depending on local licensing, for young toddler groups (typically one for every four children). These special cribs must be of durable construction, be narrow enough to pass through a 915 mm door, and have sturdy caster wheels (approximately 100 mm in diameter) which allow one person to easily roll the cribs over different indoor/outdoor surfaces. The evacuation crib must have the capability of supporting and transporting a minimum of four 18-month-old children weighing a total of 55 kg. The evacuation cribs will be placed closest to the exit in the sleeping rooms. They also function as a standard sleeping crib.

8.1.1 Storage:

Adequate storage space which is easily accessible and near-at-hand, must be provided for items such as carriages and strollers, wheeled toys, and cots or mats for pre-school classrooms. In the initial design process, the designer should elicit the number and approximate size of anticipated equipment that will need to be stored.

Storage within the classrooms should be of adequate amount to allow the classroom to appear uncluttered when occupied and should meet functional needs. A combination of low open shelving, baskets, drawers, cabinets with doors, boxes, chests, hooks that do not present a hazard, adult height shelves, wall-hung cabinets, storage bags, buckets, crates, and bins may be utilized.

8.1.2 Upholstered Furniture:

If possible, choose furniture upholstered with recycled fiber fabrics, such as PET from recycled beverage containers. Textile materials that can be easily removed for regular cleaning are generally preferred over fixed materials.

8.1.3 Chemicals:

- Volatile Organic Compounds (VOC): Carpets must have been tested for VOC's and bear a green label from the Carpet and Rug Institute indicating that the carpet emissions are within the acceptable range. (See also Section 9.3.2 for carpet requirements and Section 9.3.1 for VOC and harmful ingredient restrictions for paint.)
- Formaldehyde: Formaldehyde is a known irritant and a probable carcinogen. Products should contain less than 0.05 parts per million (ppm) of formaldehyde or have tested emission levels of formaldehyde lower than 0.05 ppm. Give preference to products made with zero added formaldehyde. Any product purchased with formaldehyde levels above 0.05 ppm must bear a label in accordance with 29 CFR 1910.1048.
- Additional harmful ingredients: See Section 9.3.1 for harmful ingredient restrictions for paint, Section 9.1 for discussion of PVC (polyvinyl chloride), and Section 8.2 for discussion of pressure treated lumber.
- EPA's Agency-wide Multimedia Persistent, Bioaccumulative, and Toxic (PBT) Pollutants Initiative focuses on the following top priority PBTs: aldrin/dieldrin, DDT, DDD, and DDE, mirex, toxaphene, hexachlorobenzene, chlordane, octachlorostyrene, benzo(a)pyrene, alkyl-lead, mercury, & compounds, PCBs, and dioxins & furans. Only materials and equipment whose manufacturing processes are completely free of the above chemicals should be used in child care facilities.

8.1.4 Storage Units:

Storage units for the children must be visible, accessible, and easy to utilize. Units may be used for dual purposes, such as serving as a space divider as well as storage. They may be movable with locking casters (except where local codes prohibit), and should be designed to prevent climbing. Shelving that is open on both sides helps to create an uncluttered, light appearance in the room. Sometimes a back to the shelving unit is desirable, and can be used to display children's art.

8.1.5 Seating:

Adult seating in the infant and toddler classroom should be soft and comfortable to provide a place where teachers can nurture children. Child-scaled seating can include upholstered or exposed frame chairs, foam cubes, carpeted constructed seating, or cushions and pillows. To avoid suffocation, bean bag pillows should not be used for infants.

8.1.6 Tables and Chairs:

Tables and chairs should be scaled to child size. Table height for infants should be approximately 300 mm; for toddlers, 400 mm; and for pre-school children, 500 mm. Chair seating heights for toddlers should be 250 mm and 300 mm for pre-school children. Infants and toddlers require high-sided chairs. Seating shall have backs and arms with a seat height of approximately 200 mm to 300 mm for pre-kindergarten; 300 mm to 425 mm for kindergarten age and older. Work surfaces or tables should have appropriate knee clearance for children in wheelchairs and shall be 600 mm above the finished floor by 600 mm deep by 750 mm wide. Top surface height should be a maximum of 50 mm higher than knee clearance. Adjustable height is preferred.

8.1.7 Countertops:

Countertops used by toddlers should be approximately 450 mm above the finished floor and 550 mm for pre-school. Counter depth should be 450 mm to 500 mm when accessed from only one side. Counters that children can access from both sides encourage socialization. In such case, the counter should not be less than 610 mm.

8.2 Play Yard Equipment

The basic purpose of children's playground equipment is to stimulate play and offer challenges while safeguarding the child and minimizing hazards. Play structures should be versatile, allowing opportunities to rearrange elements for imaginative play.

Major parameters in determining quality in play yard equipment are durability, low maintenance, recycled content, safety, functionality, challenge, and appeal to the child. All equipment shall comply with the U.S. Consumer Product Safety Commission and their current document, Handbook for Public Playground Safety, as well as ASTM-1487-1. Do not use wood of any kind other than the coated marine plywood used in some equipment. Instead, maximize the use of products made from recycled plastic or recycled plastic/wood composite materials, which are inherently durable and weather-resistant.

Following EPA's Comprehensive Procurement Guidelines (CPG) play yard equipment and surfacing should be constructed of 100% recycled content including 90-100% post consumer plastic or 50-75% post consumer plastic composites. (See Appendix G)

Safety guidelines regarding playground equipment shall be followed. Refer to ASTM F1487-F15.29 (Juvenile Products), F1004 Gates and Enclosures, ASTM 1487-95, PS 83-97, F1292 and the Consumer Product Safety Commission requirements.

Refer also to the American Public Health Association and American Academy of Pediatrics in the publication *Caring for Our Children*; National Health and Safety Performance Standards: Guidelines for Out-Of-Home Child Care Programs, Second Edition, 2002.

Major types of playground equipment are:

- Slides.
- Tire swings.
- Climbing equipment.
- Sand and water table.
- Playhouses.
- Benches/seating.
- Crawl-through structures.
- Table/seating.
- Balancing equipment.
- Wheeled toys.
- Platforms/lofts.
- Trash receptacles.

8.3 Furniture and Equipment List

The following furnishings and equipment may be supplied to GSA child care centers as part of the baseline provisions. Provisions vary according to center size, ages served, and the amount of built-in equipment provided, and may be more or less than is listed below. Equipment for each classroom and other individual spaces within the center are listed separately. Quantities are stated in a ratio of equipment per child or in total number per room as noted.

The Regional Child Care Coordinator must approve requests for items to be purchased by GSA. Some of the provisions below will be provided on a one-time, start-up basis. GSA Regional fire protection engineers shall be consulted if there is any question about the flammability of upholstered furniture.

Table 8.1: Infant Classroom

Note that the dimensions below are in feet and inches, as US children's furniture manufacturers typically do not market their equipment in metric dimensions.

Sleeping Area
Crib and mattress (1 per child)
Adult rocking chair/glide rocker (1 per 4 children)
Evacuation crib and mattress (1 per 4 children)
Air purifier
Half height gate and divider wall between play and napping area

Diapering Area
Diaper pail w/foot pedal lid or automatic sealing lid (preferred) (2)
Compartmentalized shelving over diaper changing table
Half height gate between play and changing area
Diaper changing table

Cozy Area
Floor pillow (1 per child)
Horizontal safety mirror w/wood frame
Vinyl-covered padded floor mat (2)
Solid color area rug (2)
Set geometric pillows (2)
Bean bag chair (2)
Child view display
Pull up bar with mirror
609 mm high, wood storage cabinet (2) 304 mm also good
Small futon or junior size mattress
Wood wall-mounted adult storage (2)

Messy Area
Wood chair (1 per child), height range 127-152 mm
High wood table (1 per 4 children) height range 304-355 mm
Indoor separation fencing between crawl space and eating area
Microwave oven
Dishwasher / sanitizer (for disinfecting toys)
Refrigerator with lockable medication storage
609 mm high, wood storage unit
Toddler water play table
609 mm wood frame cork board (2)
Bottle warmer

Active Area
Foam pyramid including ramps
Compact disc player
Small carpeted riser
Large carpeted riser
Picture display
Infant shelf
Boot locker (2)

Storage/Entry
Collapsible double umbrella stroller
*Multiple passenger stroller (1 per 4 or 6 children)
White eraseable board
Lockable storage for teacher's belongings
Personal storage for diaper bags
Small pigeon hole boxes for parent notices
Sign-in counter

*depends on center location and playground access

Table 8.2: Younger Toddler Classroom (12-24 Months Old)

Diapering Area

Diaper pail w/foot pedal lid (2)
Compartmentalized shelving over diaper changing table
Half height gate between play and changing area
Diaper changing table w/steps

Cozy Area

Floor pillow (1 per child)
Vertical safety mirror w/wood frame
Vinyl-covered padded floor mat (2)
Solid color area rug (2)
Set geometric pillows (2)
Bean bag chair (2)
Child view display
609 mm high, wood storage cabinet (2)
Small futon or junior size mattress
Wood wall-mounted storage cabinet (3)
Adult rocking chair/glide rocker
Air purifier
Infant reading pocket (2) or low bookshelf

Messy Area

Wood chair (1 per child) height range 152-165 mm
High wood table (1 per 4 children) height 355 mm
Microwave oven
Dishwasher (for disinfecting toys)
Refrigerator with lockable medication storage
355 mm high, wood storage unit (2)
355 mm wood frame cork board (2)
Toddler water play table

Active Area

Infant loft
Compact disc player
Small carpeted riser (2)
Large carpeted riser
Picture display (2)
Infant shelf
Boot locker (2)
Crawl through tunnel
Small dowel climber
Tracking tube
Nursery climber

Storage/Entry

Collapsible double umbrella stroller
* Multiple passenger stroller (1 per 4 or 6 children)
White eraseable board
Lockable storage for teacher's belongings
Personal storage for diaper bags
Evacuation crib and mattress (1 per 4 children)
Cot or 50 mm bicolor mat (1 per child)
Cot or mat storage
Small pigeon hole boxes for parent notices
Sign-in counter

*depends on center location and playground access

Table 8.3: Older Toddler Classroom (24-36 Months Old)

Diapering/Toilet Area

Diaper pail w/foot pedal lid (2)
Diaper changing table w/steps
Half height gate between play and changing area
Compartmentalized shelving over diaper changing table

Reading Area

Floor pillow (1 per child)
Solid color area rug (2)
Toddler reading pocket (2) or book display
Bean bag chair (2)
Picture display (2)
Small adult sofa
Aquarium

Art/Eating Area

Wood chair (1 per child) height range 254-355 mm
Utility cart
Refrigerator with lockable medication storage
Toddler sand & water table w/ lid
Toddler water play table
Low easel (2)
609 mm high, wood storage unit (4)
High wood table (1 per 6 children) height range 406-457 mm
914 mm wood frame cork board (2)

Block Area

Wood wall-mounted storage cabinet (3)
Cardboard blocks
Tracking tube
Small carpeted riser (2)
Large carpeted riser
Wooden puzzle case w/ wood puzzles
609 mm high, wood storage cabinet (3)

Dramatic Play

Vertical safety mirror w/ wood frame
609 mm wood frame cork board (2)
Toddler play furniture set
Child-size chest of drawers
Child-size round table and 4 chairs
Child-size sofa & chair
Wooden doll bed (2)

Active Area

Rocking boat
Toddler loft
Large dowel climber
Crawl through tunnel
Compact disc player

Storage/Entry

Cot or 50 mm bi-color mat (1 per child)
Children's personal storage
Cot or mat storage
White eraseable board
Lockable storage for teacher's belongings
Small pigeon hole boxes for parent notices
Sign-in counter

Table 8.4: Three-Year-Old Classroom

Reading Area	Floor pillow (1 per child) Solid color area rug Book shelf/display Bean bag chair (2) Picture display (2) Small adult sofa Aquarium Library display unit Flannel board
Art/Eating Area	Utility cart Drying rack (2) Refrigerator with lockable medication storage Sand & water table w/ lid Wood chair (1 per child) height range 304-355 mm High wood table (1 per 6 children) height range 457-508 mm Low easel (2) Chalkboard 609 mm high, wood storage unit (4) 914 mm wood frame cork board (2)
Block Area	Wood wall-mounted storage cabinet (3) Cardboard blocks Wooden puzzle case w/ wood puzzles 609 mm high, wood storage cabinet (3) Doll house w/ furniture Set wooden unit blocks w/ storage Set of small hollow wooden blocks Wood train set w/ tracks
Dramatic Play	Vertical safety mirror w/ wood frame 609 mm wood frame cork board (2) Child playhouse refrigerator Dress up tree (2) Child playhouse sink Child playhouse stove Child-size chest of drawers, open storage for clothes Child-size round table and 4 chairs Child-size sofa & chair Wooden doll bed (2)
Active Play	Rocking boat Compact disc player Preschool loft Balance boards & blocks Tracking tube Small carpeted riser Large carpeted riser (2)
Storage/Entry	Cot or 50 mm bi-color mat (1 per child) Children's personal storage Cot or mat storage White erase board Lockable storage for teacher's belongings Small pigeon hole boxes for parent notices

Table 8.5: Four-Year-Old Classroom

Reading Area

Floor pillow (1 per child)
Solid color area rug
Book shelf/display
Bean bag chair (2)
Picture display (2)
Small adult sofa
Aquarium
Library display unit
Flannel board

Art/Eating Area

Utility cart
Drying Rack (2)
Refrigerator with lockable medication storage
Sand & water table w/lid
Wood chair (1 per child) height range 355-406 mm
Rectangular wood table (2) height range 508-558 mm
Square wood table (2) height range 508-588 mm
Low easel (2)
Chalkboard
609 mm high, hinged wood storage unit (2)
914 mm wood frame cork board (2)

Block Area

Wood wall-mounted storage cabinet (3)
Cardboard blocks
Wooden puzzle case w/wood puzzles
609 mm high, wood storage cabinet (3)
Doll house w/ furniture
Set wooden unit blocks w/storage
Set large hollow wooden blocks
Wood train set w/tracks

Dramatic Play

Vertical safety mirror w/wood frame
609 mm wood frame cork board (2)
762 mm high wood storage unit (1 per 8 children)
Dress up tree (2)
Wooden cash register
Child playhouse refrigerator
Child playhouse sink
Child playhouse stove
Child-size chest of drawers
Child-size round table and 4 chairs
Child-size sofa & chair
Wooden doll bed

Active Play

Compact disc player
Preschool loft
Balance boards & blocks
Tracking tube
Small carpeted riser (2)
Large carpeted riser (2)

Construction Area

Wooden workbench
Tool cabinet w/ tools
Safety goggles (6)

Storage/Entry

Cot or 50 mm bi-color mat (1 per child)
Children's personal storage
Cot or mat storage
White erase board
Lockable storage for teacher's belongings
Small pigeon hole boxes for parent notices/Sign-in counter

Table 8.6: Summer Program Classroom

School-age-size chair (1 per child)
Children's personal storage
Wood table for school-age children (1 per 10 children)
762 mm high wood storage shelf (1 per 10 children)
Small pigeon hole boxes for parent notices

Table 8.7: Utility Room

Dryer
Lockable cabinets for chemicals
Storage shelves
Washer
Vacuum cleaner

Table 8.8: Kitchen

Dishwasher santizer
Freezer
Garbage disposal
Microwave(s)
Refrigerator(s)
Storage cabinets
Stove/oven
Industrial mixer
Electric griddle
Electric frying pan
Blender
Waffle iron
Juicer
Stainless steel food carts (1 per classroom)
3 compartment stainless steel sink

Table 8.9: Entry/Lobby

Adult chair
Bulletin board
Coffee table
End table
Lamp
Book shelf
Infant car seat (for loan)
Toddler car seat (for loan)
Slotted box for tuition checks
Small adult sofa
Small pigeon hole boxes for parent notices

Table 8.10: Office

Computer printer w/multiple hookup capabilities
Copy machine
Fax machine
Lockable storage cabinet (first aid)
Desks (2)
Computer tables (2)
Office chairs (2)
Adult guest chairs (2)
Personal computer (2)
Filing cabinets (4) at least two which lock
Book shelves (2)

Table 8.11: Sick Bay

Cot or mat (for sick child)
Small shelf for books, quiet toys

Table 8.12: Conference/Training Room

Television with VCR player (for training)
Book shelf
609 mm wood frame cork board
Dry erase white board
Conference table
Laminating machine
Multiple level butcher paper holder
Paper cutter
Label maker
Desk
Computer table
Office chair
Adult chairs (10)

Table 8.13: Teacher's Lounge

Round table & chairs (4)
Mini-refrigerator
Microwave
Adult sofa and lounge chair
Storage cabinets (if not built-in — built-in preferable)
Art waxer machine to facilitate hanging children art (2)

Table 8.14: Outdoor Play Yard

Infant/toddler climbing equipment
Low toddler climbing equipment
Pre-school climbing equipment
Shade device(s)
4 storage sheds
1800 mm to 2400 mm high fence
Wagons (4)
Preschool sand and water table (1)
Toddler sand and water table (1)
Child size picnic tables (4)
Basketball hoops (2)
Crawl tunnel (2)
Plexiglass easel (2 or more)
Outdoor dramatic play furniture
Playhouse (2)
Sand box (2)
Large set permablocks
Tricycles

CHAPTER 9:
INTERIOR FINISHES

9

9.1	**General Requirements**	**9-1**
9.2	**Color and Texture**	**9-2**
	9.2.1 Use of Color	9-2
	9.2.2 Use of Texture	9-2
9.3	**Types and Finish Materials**	**9-2**
	9.3.1 Wall Finishes	9-2
	9.3.2 Floor Finishes	9-3
9.4	**Ceilings**	**9-3**

CHAPTER 9: INTERIOR FINISHES

This chapter provides a consolidated discussion of the types of finishes required in child care centers, establishes the baseline finishes, and discusses acceptable options.

9.1 General Requirements

Flame spread ratings and smoke development requirements shall meet the requirements of GSA's Facilities Standards for the Public Buildings Service.

- Formaldehyde: Products should contain less than 0.05 parts per million (PPM) of formaldehyde, or have tested emission levels of formaldehyde lower than 0.05 ppm. Any product purchased with formaldehyde levels above 0.05 PPM must bear a label in accordance with 29 CFR 1910.1048. Provide chamber tests of materials to substantiate formaldehyde content. Give preference to products made with zero added formaldehyde. (See also Section 8.1.3.)
- Sequence the installation of finishes in a manner consistent with EPA's protocol for Environmental Requirements, Baseline IAQ and Materials, for the Research Triangle Park Campus, Section 01445. This will allow adequate time in the construction schedule to ventilate gas-containing materials prior to the installation of absorptive materials (carpet, acoustical tiles, upholstered furniture). In new centers, allow up to a month between the installation of materials which need to off-gas and the occupancy of the center. Renovations should allow the maximum feasible time to off gas, up to one month, but in no case less than one week. Use mechanical means, if necessary, to ventilate the space once renovation is complete. See Section 8.1.3 for additional restrictions on hazardous chemicals. See Section 9.3.1 for restrictions on harmful ingredients in paints. See Section 9.3.2 for indoor air quality requirements for carpet systems.

Durability, maintenance requirements, life cycle costs, appropriateness, and aesthetics of materials must be considered when choosing finishes. In addition, the selection must be environmentally sensitive, having reduced impacts in as many as possible of the following areas, most of which are described in LEED Version 2.0:

- Recycled content materials, following EPA's Comprehensive Procurement Guidelines (CPG) where possible.
- Locally manufactured materials, where possible, including locally mined or harvested raw materials and/or locally manufactured end products, to reduce transportation impacts.
- FSC-certified sustainably harvested wood for minimum 50% of all wood materials, including temporary formwork as well as permanent building components.
- Rapidly renewable, bio-based materials (such as fiberboards made from non-wood agricultural materials).
- Low-embodied energy materials.
- Materials whose components have zero ozone-depleting potential and zero global warming potential.
- Zero- or low-VOC adhesives, sealants, paints and coatings, CRI Green Label carpeting and formaldehyde-free composite wood or agrifiber products, where applicable.
- Low-maintenance materials, requiring minimal use of cleaning products or equipment.
- Materials that are likely to have a long life expectancy in their application in a child care facility.
- Materials that can be recycled or are biodegradable after their useful life.

Finishes should feel "home-like." For instance, small scale finish materials such as bricks are typically preferable to large precast panels because the brick's dimension is more congruent with the size of a child and his or her home experience. Finishes should emphasize natural materials, which harmonize a variety of textures, colors, and shapes.

All construction should be designed for safe use by children and should comply with the following criteria:

- Rounded (bullnosed) outside corners (minimum radius 13 mm).
- Non-toxic finishes.
- Finished hardwood is to have eased edges to reduce splinters.
- Slip-resistant floor coverings.
- Sealed seams and joints for sanitary cleaning and reduction of tripping hazards.
- No projecting connections.
- Impervious finishes at wet areas.

- Protective resilient fall zones under interior climbing equipment in accordance with the Handbook for Public Playground Safety, US Consumer Product Safety Commission of 10 stitches per 25 mm, anti-microbial feature, and 1800 mm minimum wide goods with non-PVC backing system.
- Add additional protection for gypsum wallboard, such as veneered plaster, impact resistant wallboard, fiberglass wall covering or some other means to "toughen" otherwise vulnerable surfaces in high use areas such as multi-purpose rooms and corridors.

9.2 Color and Texture

Both color and texture have a great impact on children. The sense of touch is directly related to cognitive development, and color has far-reaching effects which influence behavior. While cool colors tend to have a calming effect, and warm colors tend to create warmth and excitement, a consistent extreme of either in a center is not desirable.

9.2.1 Use of Color:

The overuse of a strong color scheme should be avoided, as this may result in over-stimulated, excited behavior. The predominant color above the level of the wainscot should be neutral and, in general, achieve a reflectance of 80% or greater. Stronger, more vivid colors with reflectance of 65% may be applied on one wall in corridors and along the rear walls of classrooms (opposite windows). Bear in mind that children's clothing is usually much more colorful than that of adults, and their toys and art add a great deal of color to the environment. Therefore, little "color statement" is required on the part of the designer. Do not use primary colors on walls. Too little color is better than too much in an environment where children will spend a great deal of time. Avoid complex patterns on walls and floor coverings. Select colors appropriate to the activity, using color cues to identify particular areas. Warm (as opposed to bright) hues are preferred, when appropriate. Once the color scheme has been selected as part of the design effort, it can be changed only with the approval of the RCCC.

9.2.2 Use of Texture:

Provide a variety of textures on surfaces within reach of children, especially for infants and toddlers. Utilize soft textures whenever possible, especially in quiet or sleeping areas to promote relaxed and quiet behavior. Hard textures are more appropriate for large motor activity areas where livelier behavior occurs. The use of subtle, varied, natural textures is highly encouraged as they are soothing and interesting to children.

9.3 Types of Finish Materials

The following sections contain guidelines for finishes for floors, walls, and ceilings, and discuss issues to consider when selecting finishes.

9.3.1 Wall Finishes:

- Paint: Interior paint must be non-toxic and comply with Green Seal's standard for "Paints," which includes VOC content limits of 50 grams per liter (flat) and 150 grams per liter (non-flat), as well as restrictions on the harmful ingredients listed in Appendix E. Exterior paint must comply with GSA Federal Specification TT-P-2846 which requires that paint contain a minimum of 50% post consumer waste paint taken from community collections. In addition, it must be lead and chromate free as defined by Department of Housing and Urban Development guidelines and must not contain any of the EPA 17 chemicals.
- Creation of a wainscoat is important to protect surfaces.
- Glazed coatings: Appropriate for wet areas.
- Decorative, scrubbable eggshell, minimum paint or linoleum wainscot should be used instead of vinyl or other wallcoverings where possible.
- Textiles on vertical surfaces within reach of children are not recommended, but work well for surfaces such as bulletin boards above children's reach.
- Glazed Ceramic tile: Appropriate for wet areas such as toilets and kitchens. Ceramic tile is durable, non-porous, and very cleanable, especially if grout material is epoxy. Sound deflection can be a problem with this finish.
- Display surfaces: Chalkboards, marker boards, or magnet boards may be provided as a wainscot up to 900 mm or higher. Display systems requiring tacks are not allowed and tape may damage finishes and is not allowed. The baseline amount of space available for display for each classroom will be 2400 mm long and 900 mm high. GSA will provide "art waxer" equipment which allows children's art to adhere to finishes without clamps, tacks, or tape.
- Mirror: Provide shatterproof mirror surfaces, particularly in crawling and toddler areas. Provide grab bars in front of mirrors for infants and toddlers. Mirrors shall be safety glass, acrylic, or reflective metal. Baseline amount of mirror space for infants and toddlers will be 1800 mm long, 450 mm high per classroom.
- Use 5/8" Water Resistant (W/R) type wallboard ASTM C630 in all toilet rooms, utility rooms, and kitchens.

9.3.2 Floor Finishes:

- Carpet: Most appropriate in quiet areas and crawling spaces. Carpets can retain dust and other allergens to which many children are particularly susceptible. If carpets are installed, cleaning equipment must be certified by the Carpet and Rug Institute (C.R.I.). The selection criteria for carpet should include a high-quality yarn system with inherent stain resistance, a minimum face yarn density of 5000, low-level loop or cut pile construction (maximum pile height, 6 mm), a minimum of 10 stitches per 25 mm, anti-microbial feature, and 1800 mm minimum wide goods with non-PVC backing system. The recommended backing system should be permanently bonded, with a permanent moisture barrier, installed with factory pre-applied adhesive, and seams sealed on-site. The designer also should consider using a carpet pattern which does not accentuate wear. Carpets, including area carpets or rugs, carpet cushions, and adhesives must all bear a Green Label from the Carpet and Rug Institute indicating that VOC emissions are within the acceptable range. Mats that do not fall into the above categories should be made from natural, rapidly renewable, plant materials such as coir or jute. Adhesives are to be the least toxic, effective products.
- The carpet must be recyclable to reduce contribution to the nation's waste stream, as per Executive Order.
- Flooring for wet areas, general: Provide slip resistant materials in wet areas, children's toilets, and kitchens. Evaluate materials based upon their life-cycle cost, including durability, ease of cleaning, health and environmental impacts as primary considerations.
- Sheet vinyl: Sheet vinyl is not a recommended finish, as it contains chlorine. Though it is currently installed in many centers it should not be used in new or renovation projects. Where there is no alternative, for patching exsisting work, plastic flooring which does not contain chlorine may be used. See Section 9.1 for environmental concerns about vinyl, as well as a note above on "sheet vinyl."
- Resilient vinyl tile: While this material is economical as a first cost, it requires higher maintenance than sheet vinyl and linoleum. Both are highly maintenance intense. It cannot form a moisture barrier because it has many joints. See Section 9.1 for environmental concerns about vinyl as well as a note above on "sheet vinyl."
- Linoleum: Traditional linoleum is durable and is made entirely of natural, mostly rapidly renewable materials. Linoleum does not have the plasticizer off-gassing problems associated with vinyl, although the initial odor caused by the oxidation of its linseed oil component (a trans-fatty acid) may cause irritation problems for the most chemically sensitive persons. It is available in tile or sheet form. Sheet material can be heat-welded at the seams and covered at the edges, similarly to vinyl sheet material. It is preferred to vinyl products and should be used instead of vinyl (unless there is an over riding reason for not selecting linoleum or other appropriate natural, more easily maintained material).
- Rubber: Rubber is natural material, very durable and is a second preference after linoleum.
- Sealed concrete: Economical and appropriate for hard surface areas. With an appropriate admixture, stain and finish, it can overcome the connotation of "unfriendly" or "industrial," which is often associated with raw concrete. It should be used in conjunction with carpet.
- Rugs: Rugs provide comfort and are economical. Tripping/slipping hazardscreated by rugs must be addressed through use of proper underlayment pads designed for rugs or by the use of effective edge binding and transitions. Non-slip surfacing on the reverse side of "throw" rugs is essential.
- Ceramic tile: Ceramic tile provides a durable, hard surface flooring and is traditionally used in restrooms. Larger-sized tiles minimize grout joints, which must be sealed upon initial installation in order to maintain a hygienic surface. Ceramic tile may include some amount of pre- and/or post-consumer recycled content, depending on the product. Tile used must be slip resistant.

9.4 Ceilings

Because it is economical, the majority of children's areas will have acoustical ceiling tile, 20 mm to 25 mm thick, with effective acoustical ceiling treatment. Where fluorescent fixtures which are integral with the ceiling must be used because the ceiling is too low for suspended fixtures, 600 mm x 600 mm baffled fixtures will render a less institutional appearance and offer greater flexibility. Where feasible, baffled fixtures should be used. However, the designer should consider the benefits of incorporating other materials which will render a more home-like environment, such as wall board bulkheads and soffits where practical, as well as a variety of lighting type.

Ceiling tiles should have high recycled content, which varies by manufacturer and style. Ceiling tiles should be of a high (80% min) light reflectance to enhance the lighting quality of the interior spaces. A limited area (2 m squared maximum per classroom) of mirrored ceiling tiles are encouraged over an activity area.

Painted gypsum board is appropriate in areas with soffits, ceiling height changes, vaults, or wet areas. Do not use wall board for ceiling areas where service access is required in the ceiling plenum for plumbing, HVAC, or other equipment.

Exposing structural ceiling elements provides children an interesting environment, and may increase the perceived height in low spaces, but this can also require additional acoustical treatment such as the addition of acoustical baffles.

A standard ceiling tile, easily replaced in case of damage, should be specified for acoustic ceilings.

Luminous ceilings should not be used in areas occupied by children.

CHAPTER 10:
TECHNICAL CRITERIA

10.1	**Fire Protection, Environmental, and Safety Issues**	**10-1**
10.1.1	Scope	10-1
10.1.2	Applicability	10-1
10.1.3	National Codes and Standards	10-1
10.1.4	Location	10-1
10.1.5	Means of Egress Requirements	10-1
10.1.6	Separation Requirements	10-2
10.1.7	Interior Finish	10-2
10.1.8	Automatic Sprinkler System	10-2
10.1.9	Fire Alarm System	10-2
10.1.10	Lead-Based Paint	10-2
10.1.11	Lead in Water	10-2
10.1.12	Asbestos-Containing Materials	10-2
10.1.13	Radon in Air	10-2
10.1.14	Radon in Water	10-2
10.1.15	Off -Gasing	10-3
10.1.16	CO_2 Monitoring	10-3
10.1.17	Safety Issues	10-3
10.2	**Security**	**10-3**
10.2.1	Fences and Enclosures	10-4
10.2.2	Security Systems	10-4
10.2.3	Other Considerations	10-5
10.2.4	Security Influences in Design	10-5
10.3	**Sustainable Design**	**10-5**
10.4	**Accessibility**	**10-5**
10.5	**Historic Preservation**	**10-5**
10.6	**Acoustics**	10-6
10.6.1	Control of Exterior Noise	10-6
10.6.2	Modulating Interior Noise Generated Within the Space	10-6
10.6.3	Controlling the Transfer of Noise Within Space	10-6
10.6.4	Controlling the Transfer of Sound to Adjoining Spaces Outside Center	10-6
10.7	**Windows, Doors, and Hardware**	**10-7**
10.7.1	Windows	10-7
10.7.2	Standards for Safety Glass	10-8
10.7.3	Doors and Hardware	10-8
10.8	**Plumbing and Accessories**	**10-8**
10.9	**Heating/Ventilation/Air Conditioning**	**10-9**
10.9.1	Temperature and Humidity Levels	10-9
10.9.2	Ventilation Equipment	10-9
10.9.3	Safety Issues	10-10
10.10	**Lighting**	**10-10**
10.11	**Electrical**	**10-12**
10.11.1	Requirements	10-12

CHAPTER 10: TECHNICAL CRITERIA

This chapter provides criteria for the design and construction of elements and systems throughout the center, and discusses pertinent regulations.

10.1 Fire Protection, Environmental, and Safety Issues

10.1.1 Scope:

This section provides the technical design criteria that GSA Child Care Centers must meet. The majority of the fire protection, environmental, and safety requirements are contained in numerous national codes and standards. Compliance with national codes and standards are explained, and areas where GSA's requirements differ from referenced national codes and standards are delineated.

10.1.2 Applicability:

As explained in Chapter 2, GSA will convene a "design workshop," to which all interested stakeholders shall be invited. Specifically, the design workshops shall include representation from all appropriate regional safety professionals (i.e., fire protection engineers, environmental engineers, industrial hygienists, and occupational safety and health professionals). The GSA regional safety professionals shall have the right to revise the specific requirements within this section based on a technical evaluation/ analysis and the project's specific needs.

10.1.3 National Codes and Standards:

For new construction center projects and renovation center projects, GSA shall, to the maximum extent feasible, comply with one of the nationally recognized model building codes and with other applicable nationally recognized codes. In addition, for all new construction and renovation projects, the egress requirements of the National Fire Protection Association (NFPA) Life Safety Code have been adopted by GSA in lieu of the egress requirements of the national model building code that is used. (See the latest edition of the GSA Facilities Standards for the Public Buildings Service for additional code and standard requirements.)

10.1.4 Location:

Locate centers either in a dedicated child care center building, or on the first floor (i.e., level of exit discharge) of a building either along an outside wall with window access to the exterior, or along a courtyard with window access. Centers adjacent to a courtyard must have approved means of egress out of the courtyard itself to an area of safety. Centers shall not be located below the building's level of exit discharge.

- Exception: Portions of centers located one story above the level of exit discharge in which only pre-school children (24 months or greater in age) occupy the space.

10.1.5 Means of Egress Requirements:

The egress requirements of the NFPA Life Safety Code shall be used in lieu of the requirements in the national model building code.

Special Requirements:

- Each center shall have at least two means of egress, which may exit via protected corridors, with the required fire separations.
- Panic hardware or fire exit hardware shall only be installed on means of egress doors serving more than 100 persons.
- No dead-end corridor shall exceed 20 feet (6.1 meters).
- No common path of travel shall exceed 75 feet (23 meters).
- The travel distance between any room door intended as an exit access and an exit shall not exceed 100 feet (30 meters).
- The travel distance between any point in a room and an exit shall not exceed 150 feet (45 meters).
- The travel distance between any point in a sleeping room and an exit access door in that room shall not exceed 50 feet (15 meters).
- In dedicated child care center buildings, where possible, each classroom and activity room shall be provided with one direct exit to the outside.
- Doors within the center shall be arranged to be opened readily from the egress side whenever the center is occupied. Locks, if provided, shall not require the use of a key, a tool, or special knowledge or effort for operation from the egress side. All locking arrangements shall meet the requirements of the latest edition of the NFPA Life Safety Code.

10.1.6 Separation Requirements:
Centers shall be separated from other occupancies by a minimum one-hour fire resistant rated wall with doors having a fire protection rating of not less than 45 minutes.

10.1.7 Interior Finish:
The interior finish requirements for walls, ceilings, floors, draperies, curtains, and movable partitions shall meet the requirements of the latest edition of GSA's Facilities Standards for the Public Buildings Service and LEED guidelines

10.1.8 Automatic Sprinkler System:
Automatic sprinklers shall be installed throughout all new construction center projects and all renovation center projects in accordance with the requirements of GSA's Facilities Standards for the Public Buildings Service.

Special Requirements:
- Provide sprinkler guards in areas such as multi-purpose rooms where there may be ball-throwing activities.

10.1.9 Fire Alarm System:
A fire alarm system shall be installed throughout all new-construction center projects and all renovation center projects in accordance with the requirements of the latest edition of GSA's Facilities Standards for the Public Buildings Service.

Special Requirements.
- Manual fire alarm stations shall be double-action type and installed at the required exits from the center.
- Photoelectric smoke detectors shall be installed throughout the center and shall be installed in accordance with the requirements of NFPA, National Fire Alarm Code.
- In buildings not protected throughout with an automatic sprinkler system, photoelectric smoke detectors shall be installed in the corridors of all floors occupied by the center.

10.1.10 Lead-Based Paint:
Test all existing painted surfaces in the interior of the center and center's playground equipment for lead-based paint following Department of Housing and Urban Development (HUD) guidelines. In addition, exterior paint in an area, which the children may access, must be tested. All lead-based paint detected must be abated using HUD procedures and re-tested to ensure compliance.

Please refer to Lead-Based Paint: Interim Guidelines for Hazard Identification and Abatement in Public and Indian Housing, 1990 (HUD).

10.1.11 Lead in Water:
Test all sources of water used by the center for lead at the acceptance of the substantially completed project (for new and major renovation projects that involve plumbing). In buildings over 25 years old, they should be tested annually, at a minimum, using guidance in the Environmental Protection Agency pamphlet Lead in School's Drinking Water, EPA 570/9-89-001, January 1989. If the lead levels exceed 20 parts per billion, the affected water supply must not be used and mitigation actions must be taken immediately.

10.1.12 Asbestos-Containing Materials:
Survey center (or area anticipated to house the center) for the presence of asbestos-containing materials. GSA's asbestos abatement and control program must be implemented if material is present. Asbestos-containing materials that are damaged or subject to disturbance will be abated in accordance with regulatory requirements and guidelines. In a limited area of the country, typically with highly acidic drinking water, water may also contain asbestos. While this is considered much less of a hazard than friable asbestos found in buildings, the drinking water supply should still be tested for the presence of asbestos and means taken to eliminate it as a hazard.

10.1.13 Radon in Air:
For a minimum of 90 days, test the center for radon in the air using alpha track detectors or electric ion chambers. If radon levels are at, or exceed, 4 picoCuries per liter, mitigation actions must be taken immediately.

10.1.14 Radon in Water:
Test the center for radon in water if the drinking water used by the center is obtained from a non-public water source. Environmental Protection Agency guidelines shall be used for testing as prescribed in Radon in Water Sampling Manual (EPA/EERF-Manual-78-1). If radon levels are at, or exceed,

300 picoCuries per liter, the affected water supply must not be used and mitigation actions must be taken immediately followed by re-testing.

10.1.15 Off-Gasing:
Allow a new center to "air out" before occupancy. The schedule of work should provide ventilation for off-gassing of new synthetic materials for 30 days.

10.1.16 CO2 Monitoring:
Provide the capacity for permanent carbon dioxide monitoring, including operational set point parameters to prevent indoor CO_2 levels from exceeding outdoor levels by more than 700 parts per million (ppm), as described in LEED Version 2.0.

10.1.17 Safety Issues:
The following safety issues shall be incorporated into the design of the center:

- When screened operable windows are used, guards shall be installed to protect children from falling through them.
- No sharp edges within children's areas. All corners on trim, counters, partitions, and shelving must have rounded edges with 13 mm minimum radius. In areas accessible to children, there shall be no openings between 88 mm and 229 mm in width to prevent head entrapment as per CPSC requirement.
- Interior glass must not present a safety risk for children and must comply with code. Only glass that will not break in close proximity to children's activities or will not harm children or puncture skin when glass is broken shall be used.
- Locked storage for medications and dangerous products must be provided. Additionally, "childproof" interior hardware devices must be mounted on the interior of cabinets within children's reach.
- It is essential that children's fingers be protected from being crushed or otherwise injured in the hinge space of a swinging door. There are simple devices available that attach to the hinge side, ensuring that this type of injury does not occur. As the door closes, the hand is pushed out of the opening, away from harm. In addition, young children are vulnerable to injury when they fall against the other (hinged) side of doors and gates, striking projected hinges. Piano hinges are not recommended to alleviate this problem as they tend to sag over time with heavy use. Instead, an inexpensive device fitting over hinges is available on the market and should be used to ensure safety.
- New construction must include offset hinges to protect fingers.
- Outlets in areas accessible to children must be tamper resistant as defined by NEC Article 517-18c. The intent is to "child-proof" outlets that are within children's reach to avoid any possibility of electrocution. Where practical locate them out of the child's reach (at least 1380 mm above floor level).
- No electrical outlet shall be located within 1900 mm of a water source unless protected by an approved ground fault circuit interrupter.
- Encase computer cables in conduits or channels.
- There shall be no cables or wires in the center with enough "slack" to present a possibility of strangulation should a child become entangled in them.
- No raised electrical boxes with sharp metal edges are to be used in areas or passageways used by children.
- All hot pieces of equipment, including resistance-heating elements, shall be screened from children's access.
- Care must be taken in selecting and locating telephone sets and other devices so that a child may not be subject to strangulation or other injury if he or she were to become entangled in the device's wires and cord. The same is true of window blinds with pull cords. Such wires, cords, and string must be above 1372 mm, out of children's reach.
- Edges, including shelving, table tops, and counters must have 13 mm rounded edges. Furnishings in children's areas that are 900 mm or higher must be secured in place. Mirrors must be safety glass, acrylic, or reflective metal.

10.2 Security

The purpose of designed security measures is to keep children safe within the center, to safeguard them from outside intruders, and to protect them from hazards to the fullest extent possible. GSA will define and provide the electronic security system for each center. Systems beyond those defined by GSA will be funded by the requester. Security systems provided will be those recommended by the FPS Building Security Assessment process. Systems will include equipment, base electrical power, and conduit as required. All security alarm systems shall report to an alarm system or to a central monitoring station as an audible and visual alarm signal (or both). Security system equipment may include, but is not limited to, perimeter security alarm systems, video surveillance for entrance doors and vestibules, and annunciation systems for main entrance doors.

- When required, mount a video camera at the entry/egress doors to the center. Video cameras are required when the center entrance is not visible by the building security staff, or if the security risk assessment prescribes video monitoring at the entrance. CCTV should cover all entrances, exits, and exterior play areas.
- Annunciation at the public entry door.
- Electronic security system including alarms, cameras and hardware, mounted either by the Federal Protective Service (FPS), or Facility Guard Service within the building. Monitors should be at the director's office and the FPS law enforcement personnel if located off-site. In order to conform to the ADA requirement to lower mounting heights for fire pulls and duress alarms, while also minimizing children's access to them, these devices must be provided with covers.
- Provide keypad at entry door (with location and buttons sized appropriately for use by the disabled) for authorized entry to the center without relying on staff monitoring. Controlled entry either manually by center personnel buzzing patrons in, or electronically through swipe cards and individual pin numbers or some other electronic means.
- All entry points shall be alarmed and shall include delayed-egress locking hardware at exit doors. Locks, if provided, shall not require the use of a key, a tool, or special knowledge or effort for operation from the egress side. All locking arrangements shall meet the requirements of the latest edition of the NFPA Life Safety Code. Egress doors not intended for children's use should be equipped with electronic magnetic locks.
- Duress alarms as prescribed by the building's security assessment, including duress alarms and call boxes on play yards.
- Emergency alarm signals should be audible and visible, and should be monitored by the FPS or contract guard service. Mount panic hardware on egress doors a maximum of 915 mm above the finished floor.

10.2.1 Fences and Enclosures:

Play yards must be enclosed by fences to define the play yard, allow ease of supervision of children, and protect them from unauthorized entry of individuals and vehicles. Because the design of the fence is one of the most visible elements of in the center, it must be more than simply utilitarian. In general, chain link is discouraged. The only type of chain link that may be used is dark vinyl coated (6 ga core fabric). Exposed galvanized wire, which has a highly institutional appearance, is not appropriate. It must also have no sharp, exposed parts or connection accessible to children. Additionally:

- Provide reinforced bollards, raised planters or other devices to keep automobiles from veering into the play yard area.
- The play yard should be enclosed by a minimum 2100 mm high fence. As an alternative, a shorter fence with planting or landscape features of the same height is acceptable upon approval of the RCCC in coordination with FPS.
- When the play yard is adjacent to hazards, busy roadways, or is a high security risk neighborhood, the perimeter of the play yard must be enclosed by a minimum 2440 mm high fence.
- Views into the play yard should be screened either by the fence itself or with plants or other suitable means.
- The fence bottom shall be a maximum of 75 mm (3 in) off the ground. Exposed fence bottoms should have a smooth finish for child safety.
- Gates shall be self-closing and latching. Children's fingers must be protected from pinching or crushing on gate hinge spaces.
- Except for the top and base rail of fence avoid the use of horizontal elements that may serve as ladders for climbing.
- All fastening devices used for fence construction should not project outward where they pose an injury hazard.
- Remove or trim trees with low hanging limbs if it will allow for climbing from either side of the area. In no case should limbs project below 2030 mm.

10.2.2 Security Systems:

Security systems provided will be those recommended by the FPS Security Assessment process. Systems will include equipment, base electrical power, and conduit as required. All security alarm systems shall report to an alarm system or to a central monitoring station as an audible or visual alarm signal (or both). Security systems equipment may include, but are not limited to, perimeter security alarm systems, video surveillance for entrance doors and vestibules, and annunciation systems for main entrance doors. Audible signals within the center should be consistent with those universally accepted.

10.2.3 Other Considerations:

The security risk assessment may recommend that a guard station should be located near the center so that surveillance of comings and goings to the center are easily seen by posted guards. Alternatively, a form of surveillance may be recommended.

Additional safety issues impact the space planning of the center. Treat the perimeter of the building and play yards as a controlled filter with only one primary means of public access and egress. All other service and emergency egress points should be controlled, with access limited to authorized individuals.

Ensure that there is adequate exterior lighting to allow safe exterior circulation and site security.

10.2.4 Security Influences on Design:

Additional safety issues impact the space planning of the center. Treat the perimeter of the building and play yards as a controlled filter with only one primary means of public access and egress. All other service and emergency egress points should be controlled, with access limited to authority individuals.

Design the entry approach to be visible by center staff who are inside. Position the reception area adjacent to the entry and director's office.

Buildings with child care centers must have coverage by security personnel as consistent with the FPS Security Criteria for the specific site.

The design must ensure that a child will be unable to leave the center without the knowledge of the staff. For instance, the designer must be sensitive to placement of operable windows in the vicinity of a public sidewalk, or the ability of children to open egress doors.

Window systems (glazing, frames, anchorage to supporting walls, etc.) on the exterior facades of child care centers must be designed to mitigate the hazard of glass fragments (or even whole panes) flying into occupied space following an explosive event at the exterior. To do this, the design must balance the features of the glazing, framing, and attachments with the capacity of the supporting structure to allow the system to develop its full resistive capacity. Coordination with FPS is paramount on this issue, as the feature may have a significant effect on the budget. All new exterior glazing must be laminated and span less than a 1 meter between mullions.

10.3 Sustainable Design

See definitions and discussions referenced elsewhere in this document.

10.4 Accessibility

The site, as well as the building access to and within the center, shall comply with the current publication of the Uniform Federal Accessibility Standards (UFAS), the final rules of the Americans with Disabilities Act Accessibility Guidelines (ADAAG), and local accessibility codes, whichever is most stringent. The new Standards are available via the Internet at http://www.access-board.gov/news/playguide.htm for playground rules, http://www.access-board.gov/adaag/kids/childrens.pdf for children's elements, or from the Department of Justice.

Quite often, very young children are not considered when regulations are written and enforced. Codes are developed with a tilt toward elementary and secondary schools as child care centers are a new and unfamiliar phenomenon. Most designers and code officials take their cues from elementary schools, when actually the childcare center should be thought of as a home.

Highlights and guidelines for applying the rules are contained in Appendix F. Only those items that affect children's elements are discussed. Designer's should consult ADAAG directly for guidance during the design. The appendix is primary to the non-design professional user of the Guide.

10.5 Historic Preservation

If the center is housed in a building included or eligible for inclusion on the National Register of Historical Places (NRHP), or if the center or its play yard in visible, or in close proximity to such a building, the center design must retain, respond to, and respect the use and character of the historic structure(s).

The resolution or mitigation of any adverse effect on historic property shall be coordinated with the GSA Historic Preservation Officer, the State Historic

Preservation Officer, and the Advisory Council on Historic Preservation. This coordination must start early in the planning process to allow for appropriate reviews.

Any GSA undertaking significantly affecting any building included or eligible for inclusion on the NRHP will have to be evaluated in accordance with Section 106 of the Historic Preservation Act of 1966, as amended. Work on historic buildings, structures, or properties should comply with the Secretary of the Interior's Standards for Rehabilitation and Guidelines for Rehabilitating Historic Structures (current publication) and the Fire Safety Retrofitting in Historic Buildings (August 1989), jointly written by the Advisory Council on Historic Preservation and the General Services Administration.

10.6 Acoustics

Three categories of acoustical concerns are: (1) controlling exterior noise entering the space; (2) modulating and controlling the transfer of interior noise generated within the space; and (3) controlling the transfer of noise between tenants adjacent to the center.

10.6.1 Control of Exterior Noise:

Minimizing exterior noise is typically required only when the center is adjacent to or near airport flight paths, major highways, or busy rail lines. The RCCC must approve use of sites exposed to high noise levels. If proximity to high levels of noise is unavoidable, acoustical mutigation measures are necessary. Maximum acceptable noise levels are dependent upon which area of the center is subjected to the noise and whether the sound is continuous or intermittent. Maximum acceptable noise levels at the center's exterior are as follows:

Outdoor play yards
Continuous: 70 dBA (decibels)
Intermittent: 80 dBA

Centers with sleeping and quiet areas placed next to outside wall
Continuous: 60 dBA
Intermittent: 65 dBA

Centers with sleeping and quiet areas protected and not located along outside walls
Continuous: 65 dBA
Intermittent: 70 dBA

If greater than maximum allowable noise levels exist, then acoustical treatment is required. Under these circumstances, the following is recommended:

- All window and door glazing in this area is to be acoustically laminated glass with an STC rating of 35 to 45, having an air space of 50 mm to 100 mm. (Conventional double glazing and thermal glazing is not effective in this case.)
- Exterior doors in these spaces are to be high-quality commercial doors with an STC rating of 30.
- Sound-rated doors are an acceptable but more costly solution.

10.6.2 Modulating Interior Noise Generated Within the Space:

In addition to standard commercial construction, other means should be considered to ensure sound control within the center:

- Acoustical material at the ceiling.
- Cork, linoleum, or carpet, (either through the use of non-slip throw rugs or permanently installed), should be provided in appropriate spaces. Carpet may be particularly effective in corridors which can be particularly noisy due to the narrow configuration.
- Sound attenuating wall finish should be provided where appropriate.
- Baffles, banners, and fabrics should be considered in the design to help absorb the high level of sound generated within a center.

10.6.3 Controlling the Transfer of Noise Within Space:

Maintaining low noise levels in sleeping/napping and quiet areas is important. There are various ways of achieving this to include the following methods:

- Extend interior partitions to the structure above the ceiling.
- Partitions may be single layer wall board but should have cavity insulation and should be completely caulked at the top and bottom of the partition.
- Doors opening onto noisy areas should be solid core.
- Use fabrics and baffles to absorb sound.
- Provide acoustical baffles in all duct work which penetrates sound attenuating partitions.
- Avoid back-to-back electrical outlet boxes.

10.6.4 Controlling the Transfer of Sound to Adjoining Spaces Outside Center:

Separation between child care centers and adjacent office space is recommended to be STC (sound transmission coefficient) 55. Note that this will involve a considerable expense since partitions need to be not only

insulated but should continue to the structure above any suspended ceiling. Additionally, joints will require complete caulking.

No door or window openings should be placed in walls adjoining other building tenants unless fire and acoustical requirements are maintained.

Provide acoustical baffles in all ductwork which penetrates sound attenuating partitions.

10.7 Windows, Doors, and Hardware

10.7.1 Windows:

Natural light into the interior, visual access from the interior to the exterior of the building, and visual access within the center are all of particular importance in environments for children. Windows should be provided from classrooms to the outside, between classrooms, and from classrooms to circulation paths. Both children and adult caregivers must be considered in meeting these requirements. The height and scale of windows, type of glass, clear view (no horizontal members blocking view of either adults or children), control of light, the impact of the FPS Risk Assessment, and safety factors must all be weighed.

The designer should make every effort in the design to provide an exterior window for every classroom, as a minimum. In the event that this cannot be effected and an interior space must be occupied by children, the design must still allow optimal access to light and view via clerestories, sidelights, windows, and clear lite doors (with safety glass). Children's spaces in new construction must have a total window area of at least:

- 8 percent of the floor area of the room if windows face *south* directly to the outdoors. (Note: the area of south facing glass is less since the quality of south facing light is generally brighter.)
- 10 percent of the floor area of the room if windows face *east or west*.
- 15 percent of the floor area of the room if windows face north.
- 20 percent of the floor area of the room if windows are not on an exterior wall. These must be oriented to "capture" the maximum amount of natural light. Any exceptions to these percentages must be approved by the RCCC. Areas not requiring windows include toilets, kitchen areas, laundry, multipurpose, office, conference, lounge, and storage rooms. In existing construction where the above cannot be met, at a minimum, full spectrum indirect is required.

As directed by the Federal Protective Service risk assessment, window systems (glazing, frames, anchorage to supporting walls, etc.) on the exterior facades of child care centers must be designed to mitigate the hazard of glass fragments (or even whole panes) flying into occupied space following an explosive event at the exterior. To do this, the design must balance the features of the glazing, framing, and attachments with the capacity of the supporting structure to allow the system to develop its full resistive capacity. Coordination with FPS is paramount on this issue, as this feature may have a significant effect on the budget.

The daylighting strategy used in the building design should achieve a minimum Daylight Factor (DF) of 2% in 75% of relevant spaces, including maximization of direct line of sight to vision glazing from regularly occupied areas, as described in LEED Version 2.0. Windows should be Energy Star labeled where possible, including National Fenestration Rating Council (NFRC) labeling of whole-window thermal calculations. Consider low-emissivity (low-E) glazing, depending on orientation, shading, and climate.

Horizontal window muntins (horizontal mullions) should not be located between 600 mm and 1100 mm above the finished floor because they could be used as climbing support. Windows should be placed lower, at children's viewing height above the floor. Maximum window sill heights for children are 450 mm above the finished floor for infants; 600 mm above the finished floor for toddlers; and 750 mm above the finished floor for preschool children. Ideally, sill heights should be lower than these heights, but in doing so it may constrict furniture arrangements. For the same reason, and for the likelihood of drafts, glass to the floor is undesirable.

Windows and doors with glass lower than 915 mm above the finished floor must have safety guards or be constructed of safety-grade glass/polymer, and be equipped with a vision strip. Wire glass, if required, would best be replaced with an approved alternative, if cost permits. All glazing should be clear glass. Tinted glass is not recommended except when matching existing glazing, as in a renovation project.

10.7.2 Standards for Safety Glass:

- Consumer Product Safety Commission, 16 CFR, Part 1201, Safety Standard for Architectural Glazing.
- ANSI Z97.1, Safety Performance Specifications and Methods of Testing for Safety Glazing Materials Used in Buildings.

Depending on code requirements, operable windows may be mandatory in order to provide for rescue and/or ventilation. All operable windows must have draft deflectors, screens, and safety locks, and be of a safety type to keep children from falling through. Exterior window glazing must be insulated glass. Interior windows need not be insulated, although interior spaces requiring acoustical separation may also employ laminated glazing.

Light control and energy conservation features are required on all exterior windows in children's areas, either by exterior or interior methods. In new construction, exterior overhangs or low E-type glass, or both, should be included in many areas of the country because they may be highly cost-effective over the life cycle of the building and may well justify a higher first cost, particularly on elevations with excessive heat gain. Overhangs are highly desirable but should be designed in a way that do not excessively restrict natural light, especially during winter months. Designer must reference solar declension angles for this purpose in submissions.

In addition, simple roller shades or draperies should also be used where required to control lighting and heat gain. Venetian-type blinds not recommended because, when they extend below 1375 mm children may damage them. Valances may also provide color, sound absorption, and a non-institutional appearance. Exterior windows in napping/sleeping areas may require window treatments to control direct sunlight. Light levels in all rooms, including sleeping rooms, must be maintained at a sufficient level to provide visual observation of the space from adjoining spaces. All blind cords must be kept out of children's reach. Where venetian blinds are used, the cord must end above the reach of children occupying the room.

10.7.3 Doors & Hardware:

All door hardware shall comply with UFAS and meet the requirements of the latest edition of NFPA, Life Safety Code. Lever-types appropriate for use by the disabled shall be provided for all door locks and latch-sets. To prevent injury, all doors will have closers that restrict the rate of closure. Doors accessible to children must have hardware operable from both sides, with components having smooth edges and no sharp protrusions. Door openings intended for only adult use shall have hardware installed at adult height. Main entrance doors shall have an electronic strike release with keypad or card reader and a remote release. Keypads and card readers must meet UFAS standards and meet the requirements of the latest edition of NFPA Life Safety Code.

10.8 Plumbing and Accessories

The following are requirements specific to child care centers:

- Provide paper towel and soap dispensers at all sinks (including art sinks these should be types with no serrated edges).
- Provide easily-reached clean-outs for waste piping.
- Provide a shut-off valve for each fixture so that maintenance procedures do not affect multiple plumbing facilities.
- Provide a floor drain in each children's toilet, laundry, and in each water play activity area, where possible. Drains are required above occupied space such as computer rooms.
- All hot water supplies accessible to children must have a controlled temperature not to exceed 43 degrees C (105 degrees F) at point of delivery.
- Provide a hot water supply to the dishwasher.
- Provide hot and cold faucets at each sink.
- Provide drinking fountains with a mouthguard and angled jet with a spout height of no more than 550 mm above the finished floor. Design of fountain should not leave unsafe or acutely angled projections.
- Drinking fountains will be checked to ensure they are not contributing to high levels of lead or asbestos in water.
- Solder for domestic water piping shall be lead free.

(See the section on Accessibility for toilet and sink mounting heights.)

Water conservation: In addition to considerations specific to child care centers, implement water-efficiency technologies and strategies to achieve water conservation, as described by LEED Version 2.0, including:

- Designing irrigation and planting systems to use minimum, down to zero, potable water for landscape irrigation.
- Reducing building water use by minimum 20%.

To maximize drinking water quality, use localized water-filtration systems for drinking water fixtures. Only lead-free solder and pipe fittings should be used in plumbing that may serve drinking water and other fixtures used by occupants.

Table 10.1: Plumbing Connections

Space	Plumbing Connections
Water play, classroom	Faucet and floor drain Sink (desirable)
Adult Toilet	Sink, toilet, floor drain
Laundry	Connections, drain, floor drain
Kitchen	Sink, disposal, floor drain
Janitor's Closet	Mop sink
Pre-School Activity Area	Floor drain (at water play) (desirable)
Food Preparation	Sink, disposal
Eating/Table Area	Drinking fountain
Children's Art Sink	Drain (floor drain desirable)
Diapering Station	Sink*, drain (floor drain desirable)
Children's Toilet	Floor drain
Children's Handwashing Sink	Sink, drain (floor drain desirable)
Children's Private Toilet	Sink, toilet, drains (floor drain desirable)
Play Yard	Hose bibb for water play, drain, drinking fountain (optional, depending on center need) *large

10.9 Heating/Ventilation/Air Conditioning

The comfort and safety of the children and adults within the center are of prime importance.

According to the U.S. Department of Energy, schools could cut operating costs up to 25% by conserving energy. Similar potential exists for child care centers. Design decisions made up front for new facilities often reduce the size of heating and cooling equipment, thereby adding first-cost savings to the long-term savings earned by lower energy usage. Refrigerants used in chillers should have zero ozone-depleting potential, as described in LEED Version 2.0.

10.9.1 Temperature and Humidity Levels:

Design for a high level of thermal comfort by complying with ASHRAE 22-1992, Addenda 1995 and installing permanent temperature and humidity monitoring systems with operator controls, as described in LEED Version 2.0. Design to provide a high level of occupant control of airflow and temperature both at and away from the building perimeter, as described in LEED Version 2.0.

Temperature and humidity must be maintained within ranges stated below. Temperature levels are measured at lower than normal heights above the floor in order to accommodate children. Children spend a great deal of time on the floor, therefore both temperature control and avoidance of drafts are very important. Maximum insulation of floors (depending on the project location), including perimeter insulation of floor slabs, is required. Heating systems installed in the floor slab are not recommended for GSA buildings due to the problems with maintenance and flexibility that they entail. The following recommended guidelines state acceptable temperature and humidity ranges (measured at 900 mm above the finished floor):

- Winter: 21 Degrees C; 35 percent minimum relative humidity.
- Summer: 24-26 Degrees C; 50 percent maximum relative humidity.

Tamper-proof thermostats are to be located at a maximum 900 mm above the finished floor to monitor the temperature at the child's level. The optimum temperature control is zoned and should be appropriately adjusted for different activity areas. For instance, infant areas may be more comfortable at a 1-3 degree warmer temperature than other areas. The design A/E needs to consider this issue and make recommendations for the optimal solution to heating and cooling distribution at the concept development stage. Thermostats should be accessible to the center director or other designated staff members.

10.9.2 Ventilation Equipment:

In addition to heating and cooling equipment, a humidifier/dehumidifier may be needed to meet required levels. Each space shall be supplied with a minimum of 15 liters/second of outside air for each occupant in order to control odors and none of this air is to be returned to the rest of the building. To ensure comfort levels, the air motion in the occupied space shall not exceed 8000 mm per minute. Provide proper exhaust venting for range and clothes dryer. Consider noise level, service, and efficiency when locating equipment.

Whenever possible, provide HVAC separate from the other building systems. Apart from other advantages, this will facilitate better filtration of the dust and molds to which many children are particularly sensitive. Air diffusers should minimize drafts on children.

Design ventilation systems to allow zero exposure of non-smokers to environmental tobacco smoke (ETS) even if smoking is limited to outdoor areas, as described in LEED Version 2.0. Design ventilation systems to achieve an air-change effectiveness of minimum 0.9 per ASHRAE 129-1997 and as described in LEED Version 2.0. Locate air return over diaper and toilet areas.

10.9.3 Safety Issues:

The following restrictions apply in child care centers:

- Heating units that utilize flame must be vented properly to the outside and shall be supplied with sufficient combustion air.
- Heating units hotter than 43 °C shall be made inaccessible to children by the use of barriers such as guards or locks**.**
- Ensure that any gas-fired equipment takes 100% outside air for combustion to minimize negative pressure potential and the resulting back-drafting of combustion products into the indoor environment.

10.10 Lighting

Well-considered lighting for each activity area is a key element in creating the “home-like” environment which is a goal of the program. The quality of light should remind children of a residential environment. Broad ambient lighting is most appropriate for large motor activity spaces; task lighting is required for manipulative activities; lower light levels are needed for quiet and sleeping areas. The amount and orientation of natural light needs to be considered in the design and variation in light levels. Up to a maximum of 500 lx will be acceptable in rooms with poor natural lighting capability. Classrooms without skylights or exterior windows should have ducted light tubes to provide natural light. Light shelves which transmit light deeper into the interior are to be considered for all south-facing elevations. See the table for the minimum light levels for various functions. In addition, the following should be provided:

- 500 lx on children’s work surface for reading and close work.
- 250 lx ambient light for class and play areas (additional task lighting up to 500 lx provided where appropriate).
- Capability of being dimmed in a range of 500 lx to 50 lx for sleeping and napping areas.
- 100 lx in stairs and corridors.
- Light fixtures in classrooms and nap rooms are to be dimmable.

Light levels in all rooms, including sleeping rooms, must be maintained at a sufficient level to provide visual observation of the space from adjoining spaces. Lighting should be utilized to emphasize areas, designate boundaries, create a particular feeling, or cause a desired response.

When using fluorescent lighting, utilize electronic ballast light fixtures. Their high frequency cycles avoid perceptible flickering and allow dimming. Fluorescent lamps are to have a color temperature of 3500 degrees Kelvin minimum with the highest possible color rendering index (CRI). Minimum CRI is to be 80 or greater. This is of paramount importance to the center’s environmental quality. If there is adequate ceiling height, the better quality of reflected, ambient lighting from pendants or recesses is strongly preferred to troffer-style fluorescent fixtures. If troffer flourescents must be used, use lamps which are to be baffled to provide predominantly indirect lighting.

With reflected light, children (who are at a far lower vantage point than adults) will not look directly into the light source, a condition which causes glare and eye fatigue. Task lights, such as those provided by residential type pendant fixtures, should be used for reading, painting, and close work. Design for variety in lighting, through such devices as dimming controls, separate switching, adjustable directional fixtures, and pendant fixtures that are positioned over work areas. Consider using specialized lighting to display art work, pools of light to create excitement and variety, and high levels of light to encourage physical activity. Provide food preparation areas with fixtures having shielded or shatterproof bulbs.

Exterior light can be controlled with adjustable blinds, shades, or other types of window coverings. Window treatments on interior windows must allow for clear visibility.

Ensure that there is adequate exterior lighting to allow safe exterior circulation and site security. All lamps must have shatterproof lenses or covers.

Table 10.2: Lighting Requirements

Space	Natural Light	Lighting (in lux) (lx))
Vestibule	View	200 - 250
Reception	View	250 - 350
Main Circulation		100 - 350
Director's Office	View	500
Sick Bay (Dimmable)		300 - 500
Staff Lounge	View	500 (Dimmable)
Parent/Teacher Conference		500 (Dimmable)
Adult Toilet		150 - 250
Central Storage		250 - 350
Laundry		300 - 400
Kitchen		300 - 500
Janitor's Closet		300 - 400
Telephone Closet		400 - 500
Multiple-Purpose Space Play Area		300 - 500
Meeting Area (Dimmable)		300 - 500
Play Yard Storage		300 - 500
Infant Activity Area (Quiet areas dimmable)	Natural light	250 - 500
Toddler Activity Area (Quiet areas dimmable)	Natural light	300 - 500
Pre-Schooler Activity Area (Quiet areas dimmable)	Natural light	300 - 500
School-Age Activity Area (Quiet areas dimmable)	Natural light	300 - 750
Food Preparation		300 - 750
Eating	Natural light	300 - 500
Cubby Storage Area/Locker		300 - 500
Children's Art Sink (Dimmable)	Natural light	500 - 750
Sleeping/Crib/Napping (Dimmable)		50 - 500
Diapering Station		300 - 500
Children's Toilet		300 - 500
Children's Handwashing Sink		300 - 500
Children's Private Toilet		300 - 500

Minimize exterior light pollution, as described in LEED Version 2.0, by designing lighting as follows:

- Exterior lighting not to exceed Illuminating Engineering Society of North America (IESNA) footcandle level requirements, as stated in the Recommended Practice Manual: Lighting for Exterior Environments.
- Interior and exterior lighting such that zero direct-beam illumination leaves the building site.
- Design lighting controls to provide a high level of occupant control over interior lighting levels, including controls at child height where appropriate.
- Use compact fluorescent lamps (CFLs) instead of incandescent lamps as a general rule. CFLs should meet, at a minimum, the efficiency standards of the EPA Energy Star program. Exit signs should use LED technology and should also be EPA Energy Star labeled.

10.11 Electrical

Safety of the children and expansion of future electrical needs must be considered. All data, equipment, and communication requirements must be defined in advance to prevent inadequate facilities. Consult with GSA and center staff when defining needs.

10.11.1 Requirements:

Provide power supply as prescribed in the latest edition of GSA Facilities Standards for the Public Buildings Service for TV, VCR, AV equipment, telephones, and computers for staff and children's areas.

- Except in areas with cabinets above counters, mount receptacles at 1370 mm above the finished floor. All receptacles shall be pediatric type.
- Provide wall duplex outlets at approximately 4000 mm on center.
- Provide one duplex outlet per wall on walls less than 3000 mm.
- Provide electrical power outlets for kitchen and laundry areas for refrigerator, oven, range, freezer, convection oven, microwave oven, garbage disposal, and washer/dryer units as required. Provide power supplies where under counter appliances will be located.
- Install closed circuit TV camera(s) at each entrance/exit and at play yards as determined by the GSA security risk analysis.
- Provide for a possible additional monitor location in the staff area.
- Coordinate requirements and provide for installation of: electrically switched doors, security alarm, and intercom systems.

APPENDIX
A, B, C, D, E & F

Appendix A:
Metric/English Conversions A-1

Appendix B:
Poisonous Plants B-1:B-6

Appendix C:
Child Care Contact Sheet C-1:C-2

Appendix D:
Child Care Facility Checklist D-1:D-3
Child Care Facility Compliance Tool D-4:D-5

Appendix E:
Terms and Good Practices E-1:E-2

Appendix F:
Accessibility F-1:F-9

Appendix G:
Playground Solicitation Requirements G-1:G-2

AP

APPENDIX A

Metric/English Conversions

The list below is not an exhaustive listing of Metric to English conversions, but those commonly used in the Guide.

Given	Multipy by	To Obtain
Length		
Centimeters	0.0328	Feet
Centimeters	0.3937	Inches
Feet	0.3048	Meters
Feet	304.8	Millimeters
Inches	25.4	Millimeters
Inches	2.54	Centimeters
Inches	0.0254	Meters
Meters	3.28084	Feet
Meters	39.37	Inches
Yards	0.9144	Meters
Area		
Acre	4046.87	Sq. meters
Hectares	2.471040	Acres
Square centimeters	0.155	Sq. inches
Square meters	10.76	Sq. feet
Square feet	0.0929	Sq. meters
Square inches	645.16	Sq. mm
Volume		
Cubic centimeters	.06102	Cu. inches
Cubic feet	0.028317	Cu. meters
Cubic inches	16.38	Cu. cm
Cubic meters	1.30795	Cu. yards
Cubic yards	0.7645	Cu. meters
Gallons, US	3.7854	Liters
Liters	0.26417	Gallons

Given	Multipy by	To Obtain
Weight/Mass		
Kilograms	2.2046	Pounds
Pounds	0.45359	Kilograms
Tons	907.2	Kilograms
Mass per Unit Area		
Kilograms per sq. cm	14.22	Lb/sq. inch
Kilograms per sq. meter	0.0205	Lb/sq. foot
Pounds per sq. foot	4.8824	Kg/sq. meter
Pounds per sq. inch	0.0703	Kg/sq. centimeter
Mass per Unit Length		
Kilograms per meter	0.672	Lb/foot
Pounds per foot	1.49	Kg/meter
Mass per Unit Volume		
Kilograms per cubic meter	0.0624	Lb/cu. foot
Pounds per cubic foot	16.02	Kg/cu. meter
Energy		
BTU	1055	Joules
BTU per hour	0.293	Watts
Volume per Unit Time		
Cubic feet per minute	0.0004719	meter^3/second
Cubic meters per second	2119	Ft^3/minute
Cubic meters per second	15,580	Gallons/minute

APPENDIX B

POISONOUS PLANTS

Many popular house and garden plants are considered poisonous and can produce symptoms ranging from minor to severe. This list is not exhaustive, but gives a listing of some of the most popular plantings which are known to be poisonous, as well as non-poisonous selections. The list is provided by the U.S. Army Corps of Engineers. Check with local extensions of the US Department of Agriculture and local poison control centers for more information about the nature of common plantings in specific locations.

Toxic levels are based on the best information available; however, precise scientific data is not available. Toxicity is subject to numerous variables, including quantity, exposure, and individual reactions.

Plants on the high toxicity list are known to have caused death and could be hazardous with very little exposure. DO NOT USE. Plants on the medium toxicity list have toxic parts, but deaths have been rare, usually after prolonged exposure or consuming large quantities. Do not use these plants inside the play yard. Plants on the low toxicity list include those that may cause a rash or dermititis. Use these plants with caution.

The designer shall research the toxicity of all plants specified.

HIGH TOXICITY PLANTS

Botanical	Common	Toxic Part
Abrus Precatorius	Rosary Pea	seeds
Acokanthera spectabilis/ Carissa spectabilis	Wintersweet	fruit & plant
Aconitum napellus/ Delphinum spp.	Aconita, Monkshood	all parts
Alocasia macrorrhiza	Cunjrvoi	all parts
Brugmansia sanguinea	Red Angles trumpet	nectar, seeds
Conium maculatum	Hemlock, carrot fern or Carrot weed	all parts, large amounts
Convallaria majalis	Lily of the Valley	all parts
Daphne spp.	Daphne	berries
Diefenbachia spp.	Dumbcane	berries, few
Duranta repens	Duranta or Golden Dewdrop	berries
Ervatamia coronaria	Crepe Jasmine	all parts
Euphorbia pulcherrima	Poinsettia	sap
Euphorbia tirucalli	Naked Lady or Pencil bush	sap
Gloriosa superba	Glory lily	all parts, esp. roots
Ilex spp.	English/American Hollytree	fruits & leaves

Botanical	Common	Toxic Part
Jatropha spp.	Physic nut, Coral bush	seeds
Kalmia spp.	Mountain/Western Laurel Calico Bush	all parts
Laburnum anagyroides	Laburnum or Golden Chain	all parts
Lantana camara	Lantana	green fruits
Lobrlia cardinalis	Cardinal flower	all parts
Lingustrum spp.	Privet	fruit
Malus spp.	Apple	leaves, seed in large amnt.
Melia azedarch	Cape lilac or White cedar	fruit, leaves, bark, flowers
Melianthus comosus	Tufted honeyflower	entire plant, esp. roots
Nerium oleander	Oleander	all parts
Nicotiana glauca	Tree tobacco	entire plant, esp. leaves
Prunus armeniaca	Apricot	kernel in large amounts
Prunus dulcis	Almond	kernel-bitter type
Prunus persica	Peach	kernel, flower, leaf, bark
Rheum Rhaponticum	Rhubarb	leaf blade
Rhododendrom	Rhododendron or Azalea	leaf
Ricinus communis	Castor Oil plant	seeds: 2-8
Solanum nigrum	Black nightshade or Blackberry nightshade	green fruit
Solanum psedocapsicum	Madeira winter cherry or Jerusalem cherry	berries
Solanum sodomaeum	Apple or Sodom	fruit
Solanum tuberosum	Potatoes	green skin
Taxus baccata	Yew	all parts, esp. seed in pod
Thevetia peruviana	Yellow oleander	all parts, esp seed in kernel
Wisteria floribunda, W. sinensis	Wisteria	seeds & pods
Zanthedeschia aethiopica	Calla lily or White Arum lily	all parts, esp. juice of leaves & stem

MEDIUM TOXICITY PLANTS

Botanical	Common	Toxic Part
Aesculus spp.	Horse Chestnut, Buckeye	all parts
Aleurites fordii	Tung-oil tree	fruit kernel
Allamanda spp.	Allamanda	fruit
Alocasia maculatum	Lords & Ladies	sap
Amaryllis belladonna	Belladonna lily	bulb
Anemone	Windflower	all parts
Aquilegia spp.	Columbine	seeds
Arum italicum	Italian Arum	sap, esp. in berries
Asclepias fruticosa	Swan plant	pods
Castanospermum australe	Black bean or Moreton Bay chestnut	seeds
Celastrus orbiculatus, C. scandens	Bittersweet	all parts
Cestrum spp.	Green cestrum, Cestrum or Jessamine	all parts, esp. fruit
Colocasia esculenta	Elephant's ears or Taro	root
Cotoneaster spp.	Cotoneaster	fruit, flowers
Crataegus spp.	Hawthorn	fruit
Cycas spp.	Zamia palm or tree Zamia	seeds, fresh or improperly prepared
Cydonia oblonga	Quince	seeds, fresh leaves
Delphinium spp.	Larkspur	all parts
Digitalis purpurea	Foxglove	all parts
Eriobotrya japonica	Loquat	seeds (many)
Euonymus europaeus	Spindle tree	all parts, esp. fruit & seeds
Euphorbia marginata	Snow-on-the-mountain	sap
Gelsimium sempervirens	Carolina Jassamine	all parts
Hedera helix	English Ivy	all parts, esp. berries
Hura crepitans	Sandbox Tree	all parts
Hyacinthus orientalis	Hyacinth	all parts, esp. bulb
Hydrangea spp.	Hydrangea	flowers
Iris germanica	Flag iris, Flag lily, or Fleur de lis	all parts
Laburnum anagyroides	Common goldchain	seeds
Lupinus spp.	Lupine	seed pods
Manihot esculenta	Cassava	raw roots
Moraea spp.	Butterfly iris	all parts
Narcissus jonquilla	Jonquil	sap & bulb
Narcissus pseudonarcissus	Daffodil	sap & bulb

Botanical	Common	Toxic Part
Nerine spp.	Spider lily	bulb
Ornithogalum thyrsoides	Star-of-Bethlehem or Chincerinches	bulb & flower spike
Philodendron spp.	Philodendron	all parts
Physalis spp.	Groundcherry, Chinese Lanterns, Tomatillo	unripe fruit
Plumeria spp.	Frangipani	sap
Poinciana gilliesii	Bird-of-paradise plant	unripe seed pod
Prunus cerasus	Cherry	kernels
Prunus laurocerasus	Cherry laurel	bruised leaves
Pyrus communis	Pear	seeds
Rhamnus spp.	Buckthorns & Cascara Sagrade	fruit
Robinia pseudoacacia	Black locust or Robinia	all parts
Schinus molle	Pepper tree	fruit
Schinus terebinthifolius	Japanese pepper tree	fruit, large amounts
Scilla jonscripta, peruviana	Bluebell, squill	bulb
Solandra spp.	Golden chalice	sap, leaves, flowers
Solanum dulcamara	Bittersweet or Woody Nightshade	berries
Solanum laciniatum or vescum	Kangaroo Apple	green fruit

LOW TOXICITY PLANTS

Botanical	Common	Toxic Part
Achillea millefolium	Yarrow or Milfoil	all parts
Agapanthus orientalis	Agapanthus or African Blue Lily	sap
Artemisia absinthium	Wormwood	all parts
Caladium spp.	Caladium	all parts
Chrysanthemum morifolium	Florist's chrysanthemum	all parts
Chrysanthemum parthenium	Feverfew	all parts
Chrysanthemum coccineum	Pyrethrum	all parts
Chrysanthemum maximum	Shasta daisy	all parts
Clematis spp.	Traveller's joy	all parts
Colohicum autumnale	Autumn crocus	flowers
Cosmos bipinnatus	Cosmos	all parts
Dicentra	Bleeding heart	all parts
Echium lycopsis	Paterson's curse	all parts
Euphorbia milii	Crown of Thorns	sap
Helenium autumnale	Sneezeweed	all parts

Botanical	Common	Toxic Part
Helianthus annuus	Sunflower	all parts
Monstera deliciosa	Fruit salad or Swiss Cheese plant	ripe fruit
Primula obconica	Primul	all parts
Ranunculus spp.	Buttercups	all parts
Rhus cotinus	Smoke tree	sap
Rudeckia hirta	Black-eyed-Susan	all parts
Sencio cineraria	Dusty miller	all parts
Tanacetum vulgare	Common pansy	all parts
Urtica spp.	Stinging nettle	all parts

ADDITIONAL TOXIC PLANTS BY COMMON NAME ONLY

Amaryllis	Jerusalem cherry
Jimsonweed	Barberry
Jonquil	Boxwood
Mistletoe	Mountain laurel
Castor bean	Narcissus
Chinaberry	Nephthytis/Arrowhead
Chinese evergreen	Nightshade family
Oak (acorns)	Peony
Philodendron family	Poison ivy/oak/sumac
English ivy	Pokeweed
Euonymous	Privet
Four o’clock	Fruit pits or seeds
Snowball bush/Hydrangea	Gladiola
Water hemlock	Holly

NON-TOXIC PLANTS

No evidence currently exists that these plants are poisonous.

African violet	Lilac
Christmas cactus	Marigold
Coleus	Norfolk pine tree
Corn plant	Peperomia
Crocus (spring)	Petunia
Dandelion	Prayer plant
Dogwood	Pyracantha/Firethorn
Dracaena	Rose
Easter lily	Rubber tree plant
Ferns	Sansevieria/Snake plant
Ficus*	Scheffiera*
Forsythia	Spider plant
Fuchsia	Swedish Ivy
Geranium	Tulip*
Hibiscus	Wandering Jew
Honeysuckle	Wax plant
Impatiens	Wild strawberry/Snakeberry
Jade plant	Zebra plant

***Sap may be irritating**

APPENDIX C

UNITED STATES GENERAL SERVICES ADMINISTRATION
REGIONAL CHILD CARE COORDINATORS

Office Of Child Care Headquarters

Eileen Stern, Director
26 Federal Plaza, Rm 2-128
New York, NY 10278
212.264.8321
212.264.0503 fax

Frank Kirchoff, Deputy Director
26 Federal Plaza, Rm 2-128
New York, NY 10278
212.264.1268
212.264.0503 fax

Sue Dixon
1800 F Street, NW, Rm 4209
Washington, DC 20405
202.501.0287
202.208.7578 fax

Jill Rhea
20 N 8th Street, 8th Floor
Philadelphia, PA 19107
215.446.4639
215.209.0487 fax

Nancy Norris
77 Forsyth Street, SW
Suite 400
Atlanta, GA 30303
404.331.1851
404.331.4545 fax

Liz Themelis
10243 Echo Hill Drive
Brecksville, OH 44141
216.522.4963
440.838.4752 fax

New England Region 1

Sherri Edwards
10 Causeway Street
Rm 975
Boston, MA 02222-1077
617.565.7312
617.565.5967 fax

Northeast & Caribbean Region 2

Sidny Lincoln
Cora Zoccolo Ungaro
26 Federal Plaza, Rm 2-128
New York, NY 10278
212.264.0512 or 0514
212.264.0503 fax

Mid-Atlantic Region 3

Robyn Major
20 N 8th Street, 8th Floor
Philadelphia, PA 19107
215.446.2893
215.209.0493 fax

Southeast Sunbelt Region 4

Janie Heisner
77 Forsyth Street, SW
Suite 400
Atlanta, GA 30303
404.331.4729
404.331.4545 fax

Great Lakes Region 5

Connie Chinn
230 South Dearborn
Rm 3866
Chicago, IL 60604
312.886.0611
312.886.4064 fax

Heartland Region 6

Barbara Daniels
1500 East Bannister Road
Kansas City, MO 64131
816.823.2215
816.926.1779 fax

APPENDIX C

UNITED STATES GENERAL SERVICES ADMINISTRATION
REGIONAL CHILD CARE COORDINATORS

Greater Southwest Region 7

BJ Upton
819 Taylor Street
Rm 12B24
Fort Worth, TX 76102
817.978.8451
817.978.7098 fax

Rocky Mountain Region 8

Jacki Fling
Building 41 DFC
Rm 275
Denver, CO 80225-0006
303.236.8000x2264
303.236.8018 fax

Pacific Rim Region 9

Lyvette Norris
450 Golden Gate Avenue
4th Floor East
San Francisco, CA 94102
415.522.3350
415.522.3311 fax

Northwest/Artic Region 10

Jennifer Bashford
400 15th Street, SW, 10PZ
Auburn, WA 98001
253.931.7700
253.931.7588 fax

National Capital Region (NCR)

Leo G. Bonner
7th and D Streets, SW
Room 7013
Washington, DC 20407
202.205.7255
202.205.7388 fax

Go to the child care website for the latest information.

www.gsa.gov/childcare

APPENDIX D

D.1 Child Care Facility Checklist
Infant Room

	ROOM	ITEM	Yes	No	n/a	Unit	Exten.	Cost	Priority	Comment
	INFANT Room size: **sq ft/child** **rm.'s license cap.:** **approx. clg height:** **room orientation**	North South East West								
1	Doors	Doors/gates have finger protection (both sides)								
2		Doors/gates have visibility panel at child level								
3		Doors/frames are correctly fire-rated/have label (if needed)								
4		Doors have proper hardware including closers								
5	Floor	Carpet is sustainable and in good condition/ no trip hazards								
6		Floor finish in good condition and properly located (e.g. no carpet under wet areas)								
7	Walls	Washable wainscot material in place & good condition (vinyl not recommended)								
		Outside corners have **integral** 1/2" diameter beads to protect against injury								
8		Walls painted light color on at least three walls and in good condition								
		on exterior and side walls of classrooms								
9	Ceiling	Ceiling in good condition								
10	Lighting	Clg. Lighting at least partially indirect type (not typical office type)								
11		Lighting has guards to prevent/protect from bulb breakages								
12		Light is full spectrum and dimmable (4500 Kelvin minumum-maximum C.R.P)								
13		Flourescent lighting has electronic ballasts								
14		At least two types of lighting configurations in room for variety								
	Windows	Windows provide FPS PSS prescribed glazing protection								
15		If window glazing film req'd.< 7 yrs old/good condition								
16		Room has natural light from windows (8% of floor area min.)								
17	Electrical	Electrical outlets are pediatric type and mounted above child's reach								
18	Duress	The room has emergency intercom to director's office								
	HVAC	HVAC is adequate to avoid smell/ air does not return to main bldg								
19		Hot and Cold Water								
20	Cabinetry	Cabinets have non-projecting hardware, or hardware that cannot seriously harm child								
21		Wall cabinetry or shelving for storage above 1350mm								
22	Plumbing									
24	Equipment	Correct/proper amount of kitchenette equipment								
25		Classroom includes change of level/built in platform/purchased loft								
26		Classroom furniture/equipment proper and in good condition								
27	ADA	Classroom complies with ADA (including children toilet & diaper)								
28	Arrangement	Excellent access to play yard directly from or near classroom								
29		Exterior corners have 1/2" dia. bullnose edges/no sharp edges								
30		There are windows at children's height for exterior view								
31		Supervision adequate (w/ windows etc, when required)								
32		Lactation area provided								
33		Cubbies form "cloakroom" at entry/do not impact program areas								
34		There are windows at child hgt. between classroom/corridors								
35		Crib area with low walls (not fully enclosed, even with windows)								

Child Care Facility Checklist
Classroom

	Room	Item	Yes	No	n/a	Priority	Comment
	Support Space						
1		Adequate size to accommodate files and office equipment					
2		There is adequate space for parent conferences or separate					
		conference room provided					
3		The office has the best possible vantage to see those approaching the center					
		as well as supervision of center activities					
4		Dishwasher is commercial grade or heavy-duty residential					
5		Sinks are at least two compartment/deep for pots and pans					
6		The kitchen is w/a sanitizer					
7		Venting complies with code requirements					
8		Teachers have lockable personal storage in lounge					
	Play yard						
P1		There is sand play provided					
P2		There is water play provided					
P3		This is an adequately sized, weather-resistant storage shed					
P4		There is an area for wheeled toys					
P5		There are natural elements and plantings on the play yard					
P6		There is a water fountain located close to play activities					
P7		There are toilet facilities located close or adjacent to the play yard					
P8		There are large motor/physical challenge/level change opportunities					
P9		There are areas to retreat to to “get away” such as play house					
P10		There are seating areas for children					
P11		There are areas where indoor activities can be brought outside					
		such as easels for painting					
P12		There is adequate shade provided (25% between 10am-4pm on June 21)					
P13		There is emergency egress provided from yard (w/ alarm)					
P14		There is a secure perimeter w/ fence of height required					
P15		No head entrapment areas noted (openings between 3.5"-9")					
P16		There is proper fall surface (engineered wood fiber system, drainable synthetic protec-					
		tive impact surface) at least 6'-0" surrounding raised play events as referred by CPSC					
P17		The play equip. is in good condition w/ no projecting or sharp hardware					
P18		There is the appropriate separation (depending upon local licensing)					
		between different age groups on the play yard					
P19		There is adequate lighting for security, especially during the early					
		morning and late afternoon when the area may be dark					
P20		The play yard is protected by bollards or other devices to keep cars					
		from veering into the yard when it is located near busy traffic					
P21		Sand play is located near water play					
P22		There is a gate for maintenance					

Child Care Facility Checklist

	ROOM	ITEM	Yes	No	n/a	Unit	Exten.	Cost	Priority	Comment
	INFANT Room size:									
	sq ft/child									
	rm.'s license cap.:									
	approx. clg height:									
	room orientation	North South East West								
1	Doors	Doors/gates have finger protection (both sides)								
2		Doors/gates have visibility panel at child level								
3		Doors/frames are correctly fire-rated/have label (if needed)								
4		Doors have proper hardware including closers								
5	Floor	Carpet is sustainable and in good condition/ no trip hazards								
6		Floor finish in good condition and properly located								
7	Walls	Washable wainscot material in place & good condition (vinyl not recommended)								
8		Walls painted light color on at least three walls and in good condition								
		on exterior and side walls of classrooms								
9	Ceiling	Ceiling in good condition								
10	Lighting	Clg. Lighting at least partially indirect type (not typical office type)								
11		Lighting has guards to prevent/protect from bulb breakages								
12		Light is full spectrum and dimmable (4500 Kelvin, minumum-maximum C.R.O.)								
13		Flourescent lighting has electronic ballasts								
14		At least two types of lighting configurations per room for variety								
15	Windows	Windows provide FPS PSS prescribed glazing protection								
16		Window glazing protecton is < 7 yrs old/good condition								
17		Room has natural light from windows (8% of floor area min.)								
18	Electrical	Electrical outlets are pediatric/mounted above child's reach								
19	Duress	The room has emergency intercom to director's office								
20	HVAC	HVAC is adequate to avoid smell/ air does not return to main bldg								
21	Cabinetry	Cabinets have non-projecting hardware that cannot harm child								
22		Optimal wall cabinetry and shelving for storage								
24		Diaper station(s) are the correct size and face classrooms								
25	Plumbing	ADA conforming adult toilet near (—Meters) of classroom door								
26		Proper amt./location of sinks (no cross contamination possible)								
27	Equipment	Correct/proper amount of kitchenette equipment								
28		Classroom includes change of level/built in platform/purchased loft								
29		Classroom furniture/equipment proper and in good condition								
30	ADA	Classroom complies with ADA (including children toilet & diaper)								
31	Arrangement	Excellent access to play yard directly from or near classroom								
32		Exterior corners have 1/2" dia. bullnose edges/no sharp edges								
33		There are windows at children's height for exterior view								
34		Supervision adequate (w/ windows, etc where required)								
35		Lactation area provided								
36		Cubbies form "cloakroom" at entry/do not impact program area								
37		There are windows at child hgt. between classroom/corridors								

D.2 Child Care Facility Compliance Tool

		(Name of center)			
		( ) INTERIOR CHILD CARE SPACE REPORTED BY REGION ( ) CAPACITY			
PART 1					
		THERE ARE OUTSTANDING FIRE SAFETY/ LICENSING ISSUES	YES	NO	REGION TO BOLD ONE
		WHERE REQUIRED MITIGATION FOR SECURITY (SUCH AS GLAZING) HAS BEEN	YES	NO	REGION TO BOLD ONE
		ACCOMPLISHED			
PART 2		**ITEM**			**COMMENT**
	1	THE CENTER COMPLIES WITH THE DESIGN GUIDE RECOMMENDED ALLOTMENT			
		OF SPACE PER CHILD	5		
	2	IN THE CLASSROOM, THERE IS 50 SQ. FT MINIMUM OF **ACTIVITY**			
		AREA PER CHILD (EXCLUDES FURNISHINGS)	10		
	3	THE TOTAL CENTER INTERIOR AREA PROVIDES 75 SQ FT OF INTERIOR SPACE	5		
		PER CHILD			
	4	CENTER CAPACITY IS VIABLE FOR RETAINING VENDOR IN THE MARKET	5		
	5	THE CENTER HAS SINKS/TOILET/DIAPERING FACILITIES ACCESSIBLE BY THE CHILD			
		WITHIN THE CLASSROOM	5		
	6	THE CENTER HAS 75 SQUARE FEET MINIMUM FOR HALF THE CAPACITY OF THE			
		CENTER ON THE PLAY GROUND AND IS ARRANGED TO SEPARATE AGE			
		GROUPS FROM EACH OTHER IF REQUIRED BY LOCAL LICENSING	5		
	7	THE CENTER COMPLIES WITH THE DESIGN GUIDE IN TERMS OF AMOUNT OF			
		STORAGE/SUPPORT AND ADMINISTRATION SPACE FOR THE CENTER CAPACITY	5		
PART 3		**ITEM - QUALITY AND SUPERVISION**			
	1	PRINCIPAL FINISHES IN THE CENTER MEET DESIGN GUIDE STANDARD AND	5		
		ARE LESS THAN 10 YEARS OLD - PAINT LESS THAN 5 YEARS OLD			
	2	CLASSROOM WALLS ARE PREDOMINANTLY OFF-WHITE, LIGHT PASTEL WITH	5		
		CARPETS MUTED IN COLOR AND DESIGN			
	3	THERE ARE **NO** WINDOWLESS CLASSROOMS IN THE CENTER. YES=15			
		PRO-RATE FOR EACH NON-COMPLYING CLASSROOM			
		(EXCEPT MULTIPURPOSE)	15		
	4	EVERY CLASSROOM HAS A VIEW WINDOW AT CHILD LEVEL (INTERIOR OR EXTERIOR)			
		DEDUCT 1 FOR EACH NON COMPLYING CLASSROOM UNTIL 0 IS REACHED	5		
	5	THE CENTER DIRECTORS OFFICE/ADMIN AREA CAN SUPERVISE ENTRY/EXIT AT			
		THE ENTRY DOOR AND ALL UNSUPERVISED DOORS ARE ALARMED	5		

Child Care Facility Compliance Tool

			YES	NO	COMMENT
	6	THE SUPERVISION OF CHILDREN IS FACILITATED BY ARRANGEMENTS			
		WHICH DO NOT FORCE ADULTS TO TURN THEIR BACKS ON CLASSROOMS			
		WHILE DIAPERING AND WHICH FACILITATE ADULT/CHILD INTERACTION.			
		NAP ROOMS ARE NOT SEPARATE, AND ARE SUPERVISABLE	5		
	7	ACCESS TO THE PLAY YARD IS LESS THAN 100 FEET FROM ANY			
		CLASSROOM	5		
	8	THE CENTER IS ADA/CPSC COMPLIANT INCLUDING THE PLAY YARD	5		
	9	THERE IS ADEQUATE ACOUSTIC SEPARATION IN AND BETWEEN CLASSROOMS	5		
		(35 STC MINIMUM)			
	10	THERE ARE NO HEATING, VENTILATING (INCLUDING DIAPER AND TOILET			
		EXHAUST) PROBLEMS REPORTED AND THE CENTER COMPLIES WITH THE			
		MECHANICAL REQUIREMENTS OF THE DESIGN GUIDE	5		
		TOTAL	**100**		
PART 4		***MITIGATION***			
		IF A CENTER SCORES BELOW 65 POINTS, THE FOLLOWING FEATURES MAY BE COUNTED TO			
		INCREASE THE OVERALL SCORE			
	1	*WHEN CENTER AND PLAYGROUND FINISHES HAVE BEEN REPLACED,*			
		ENVIRONMENTALLY APPROPRIATE MATERIALS AND METHODS HAVE BEEN USED	*1*		
	2	*PLAYGROUND CAN BE USED YEAR ROUND AND HAS MORE THAN MINIMUM*			
		SQUARE FOOTAGE, COVERED AND UNCOVERED EQUIPMENT AND ACTIVITIES	*4*		
	3	*PLAYGROUND HAS **ALL** OF THE FOLLOWING: TRIKE TRACK, WATER PLAY,*			
		SAND PLAY, LARGE MOTOR PLAY, DRAMATIC PLAY	*2*		
	4	*THE CENTER HAS A MULTIPURPOSE ROOM WHICH WILL ACCOMMODATE THE*	*2*		
		LARGEST CLASSROOM/ WITH THE AREA PROVIDED AS PER DESIGN GUIDE			
	5	*LIGHTING IN CHILDREN'S SPACES IS INDIRECT*	*2*		
	6	*LIGHTING IN CHILDREN'S SPACES IS FULL "SPECTRUM" WITH EXCELLENT*	*2*		
		COLOR RENDITION (85 COLOR RENDERING INDEX (C.R.I))			
	7	*TYPE OF LIGHTING IS VARIED (PENDANT, INDIRECT, ETC.)*	1		
	8	THERE ARE DEDICATED AREAS WITHIN THE CLASSROOMS AND CORRIDORS TO DISPLAY CHILDRENS ART			
		AND PROJECTS AT THE CHILD'S HEiGHT (1650 mm ABOVE FLOOR, MIN.)	2		
		GRAND TOTAL			**65 NEEDED TO PASS**
					100 TOP POSSIBLE SCORE
		OVERALL COMMENT -			

APPENDIX E

Sustainable Design - Terms and Good Practices

Terms:

Daylight Factor (DF) - The ratio of daylight illumination at a given point on a given plane, from an unobstructed sky of assumed or known illuminance distribution, to the light received on a horizontal plane from an unobstructed hemisphere in the sky, expressed as a percentage. Direct sunlight is excluded for both values of illumination. The daylight factor is the sum of the sky component, the external reflected component, and the internal reflected component. The interior plane is usually a horizontal workplane. (Source: Sustainable Building Technical Manual)

Ecosystem - A basic unit of nature that includes a community or organisms and their nonliving environment linked by biological, chemical, and physical process. (Source: LEED Reference Guide)

Embodied Energy - The total energy that a product may be said to "contain," including all energy used in growing, extracting, and manufacturing it and the energy used to transport it to the point of use. The embodied energy of a structure or system includes the embodied energy of its components plus the energy used in construction. (Source: Sustainable Building Technical Manual)

Emissivity - By Kirchoff's Law, for a given wavelength of the electromagnetic spectrum, emissivity of a surface equals its absorptivity and is the reciprocal of its reflectivity. (Source: Sustainable Building Technical Manual)

Heat Island Effect - Thermal gradient differences between developed and undeveloped areas. The use of dark, non-reflective surfaces for parking, roofs, walkways, and other surfaces contribute to heat islands from which the heat of the sun is absorbed and radiated back to surrounding areas. (Source: LEED Reference Guide)

Indoor Air Quality (IAQ) - According to the Environmental Protection Agency [EPA] and National Institute of Occupational Safety and Health [NIOSH], the definition of good indoor air quality includes: (1) introduction and distribution of adequate ventilation air; (2) control of airborne contaminants; and (3) maintenance of acceptable temperature and relative humidity. According to AHRAE Standard 62 [1999], indoor air quality is defined as "air in which there are no known contaminants at harmful concentrations as determined by cognizant authorities and with which a substantial majority (80 percent or more) of the people exposed do not express dissatisfaction." (Source: Sustainable Building Technical Manual)

Integrated Pest Management (IPM) - An environmentally sound system of controlling landscape pests, which includes well-times nontoxic treatments and understanding of the pests' life cycle. (Source: Sustainable Building Technical Manual)

Light Pollution - Waste light from building sites that produces glare, compromises astronomical research, and adversely affects the environment. Waste light does not increase night time safety, utility, or security and needlessly consumes energy and natural resources. (Source: LEED Reference Guide)

Renewable - A renewable product can be grown or naturally replenished at a rate that exceeds human depletion of the resource. (Source: Sustainable Building Technical Manual)

Volatile Organic Compound (VOC) - Chemical compounds based on carbon and hydrogen structures that are vaporized at room temperatures. VOCs are one type of indoor air contaminant. Although thousands have been identified in indoor air, only a few are well understood and regulated. (Source: Sustainable Building Technical Manual)

Sustainable Processes and Practices to be incorporated into the design of Child Care Centers:

The current draft version of the LEED Commercial Interior standard includes an entire section devoted to the pre-design sustainable/ high-performance aspects that precede the design of a commercial interior. These aspects are summarized below:

- Pre-Design Goal Setting: Set goals for environmental performance prior to the outset of design with key team members ensuring that:
    1. Design team is in place prior to the tenant's location decision.
    2. Project programming documents address the interrelationships between the functional, financial, aesthetic, environmental goals of the project

- Building Location and Site Selection: Channel development to urban or suburban areas with existing infrastructure, protecting greenfields, and preserving habitat and natural resources by a number of activities, including:
    1. Building selected for tenant relocation is located in an established building in a previously developed area.
    2. Occupant renews lease at current location.
    3. Occupant signs long-term lease.

The other concepts contained in this draft section are discussed in the context of new construction in Section 5.1, based upon site selection criteria found in LEED Version 2.0.

- Best Practices: Encourage tenants to select buildings with best practice systems and employed green strategies. The specific criteria for green strategies are essentially some of those included in LEED Version 2.0. Selection of a LEED Certified Building is a proposed alternative method for achieving credit in this category.
- Flexibility of Design: Encourage design that is easily reconfigured for future expansion and/or contraction, thus decreasing churn costs and conserving resources, by specifying some percentage of building interior components to be easily reconfigurable.
- Accredited Professional: Support and encourage design integration required by a LEED project and streamline the application and certification process by including at least one principal participant of the project team that has successfully completed the applicable LEED Accredited Professional exam.

2.2.3 Integrative Design:

The integrated design process begins with the first “design workshop” and continues throughout the various project phases. This process provides a forum and methodology wherein every team member is encouraged to cross-fertilize solutions to problems that may relate to, but are not typically addressed by, their specialty. The objective is to have every member of the design team understand the issues that the other members need to address.

This is a successful way to educate all the participants: architects, engineers, and the client team. Staff members are invited to participate throughout the process. Participants are educated about the issues and “buy in” to the solutions. The education process is accelerated, decisions are verified, adversity is diminished, the nuances of organizational issues are learned, and the design process is expedited because of the presence of the involved parties while most of the major issues are explored. More thorough and integrated solutions are the result.

2.2.4 Construction Management:

The A/E contract should include development of the following environmental management plans, developed with the input of relevant consultants and stakeholders:

- Building Commissioning: Implement fundamental best practice commissioning procedures referenced in LEED Version 2.0, and meet as many additional commissioning referenced criteria as feasible
- Construction Waste Management: Develop a detailed program for construction/ demolition waste materials recycling, as described in LEED Version 2.0.
- Construction IAQ Management: Develop a detailed program to indoor air quality contamination from construction by meeting SMACNA IAQ Guidelines for Occupied Buildings under Construction, protecting stored or installed absorptive materials, replacing air filtration media prior to occupancy, and conducting an IAQ testing procedure, as described in LEED Version 2.0.

Harmful Paint Ingredients which are not allowed in “Green Seal” products:

1,1,1-trichloroethane
acrolein
antimony
butyl benzyl phthalate
di(2-ethylhexyl) phthalate
diethyl phthalate
ethyl benzene
hexavalent chromium
mercury
methyl isobutyl ketone
napthalene
vinyl chloride
1,2-dichlorobenzene
acrylonitrile
benzene
cadmium
di-n-butyl phthalate
dimethyl phthalate
formaldehyde
isophorone
methyl ethyl ketone
methylene chloride
toluene (methyl benzene)

APPENDIX F

ACCESSIBILITY

This Appendix is included primarily to aid non-design professionals in visualizing accessibility requirements. A/E's should consult the latest ADAAG and UFAS regulations.

Note that the following diagrams are annotated in feet and inches because the codes and regulations which they reference are expressed thus. It is GSA's policy not to "translate" codes and regulations generated by outside entities. However, construction documents must be consistent: "If the contract calls for drawings to be in metric, it is the A/E's responsibility to express the all dimensions in the child care portion of the work metrically, per PBS P100, including those related to accessibility."

Space Allowance and Reach Ranges:

- Circulation surfaces to play events in the play yards shall be suitable for wheelchairs to move across them.
- When improperly applied, reach ranges create unsafe situations in child care centers. Electrical plugs, switches, fire alarm pulls, intercoms, etc. fascinate children. These devices must be kept away from curious hands. The maximum side reach for an adult in a wheelchair is 54" from a side approach. Although 60" is preferred, 54" will keep most children safe.

REACH RANGE			
FORWARD OR	AGES		
SIDE REACH	3 AND 4	5 THRU 8	9 THRU 12
HIGH (MAXIMUM)	36 INCHES (915 mm)	40 INCHES (1015 mm)	44 INCHES (1120 mm)
LOW (MINIMUM)	20 INCHES (510 mm)	18 INCHES (455 mm)	16 INCHES (405 mm)

Accessible Route

- Passage width: The minimum clear width of aisles and corridors for children's wheelchairs is 915 mm; with passing space of 1525 mm provided at least every 60 960 mm.

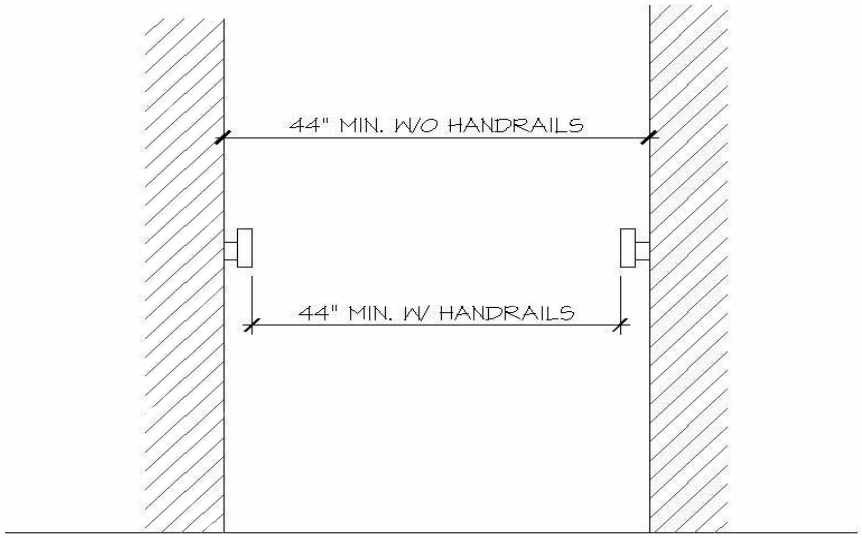

INTERIOR ACCESSIBLE ROUTE

Protruding Objects

- No children's requirements.

Ground and Floor Surfaces

- No children's requirements.

Parking and Passenger Loading Zones

- No children's requirements.

Curb Ramps

- Curbs must have cuts that comply with UFAS requirements.

Ramps

- Maximum slope and rise: 1:16 to l:20 is preferred if space is available; the maximum is 1:12.
- A second set of handrails shall be provided with a gripping surface a maximum of 711 mm above the floor. Elements of the adult handrail shall not interfere with the children's handrail. 230 mm must be provided between the handrails to prevent entrapment.

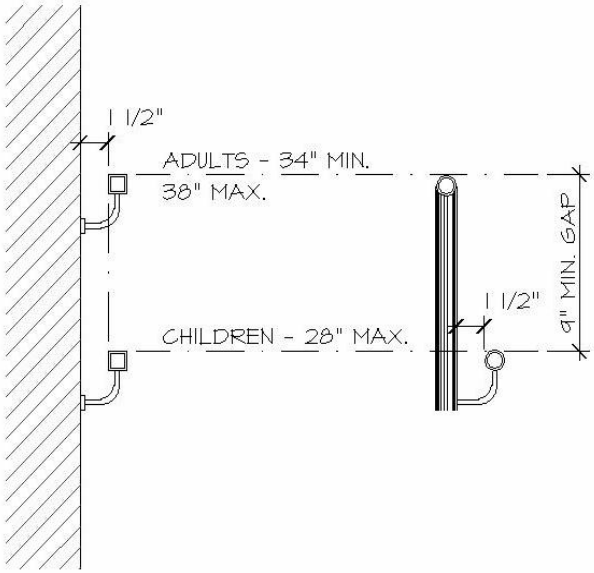

RAMP AND STAIR HANDRAILS

Stairs

- No children's requirements

Elevators

- It is not a good idea to let young children operate the elevator. Controls in a center should be installed as high as possible.

Platform Lifts

- No children's requirements.

Windows

- No children's requirements.

Doors

- Doors should be accessible, but must not be made so easy to operate that young children can escape. Keep in mind children are supervised and doors must only be operable by adults. Of course, the adult may be disabled. Hardware on doors leading out of classrooms should be installed as high as possible - 48" AFF. Hardware on door to toilets serving the classroom should be as low as practical for the age group.
- Minimum door width: 825 mm with a 1525 mm deep landing area in front of all ramps, gates and doors. For all doors through which evacuation cribs would have to pass to access an exit, the minimum door width is 915 mm.

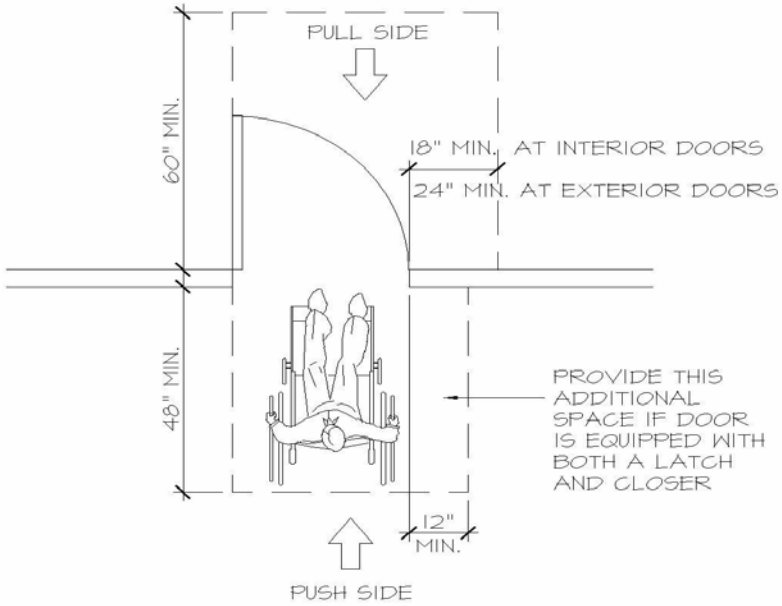

ACCESSIBLE DOORS

SCALE: 3/8"=1'-0"

Entrances

- No children's requirements.

Drinking Fountains

- Drinking fountain controls: Front or side operable; spout should be a maximum of 750 mm above the finished floor. Clearance under the unit is not required if clear floor space for a parallel approach is provided. Also provide a clear floor space of 760 mm x 1220 mm to allow a child in a wheelchair to approach the unit facing forward.

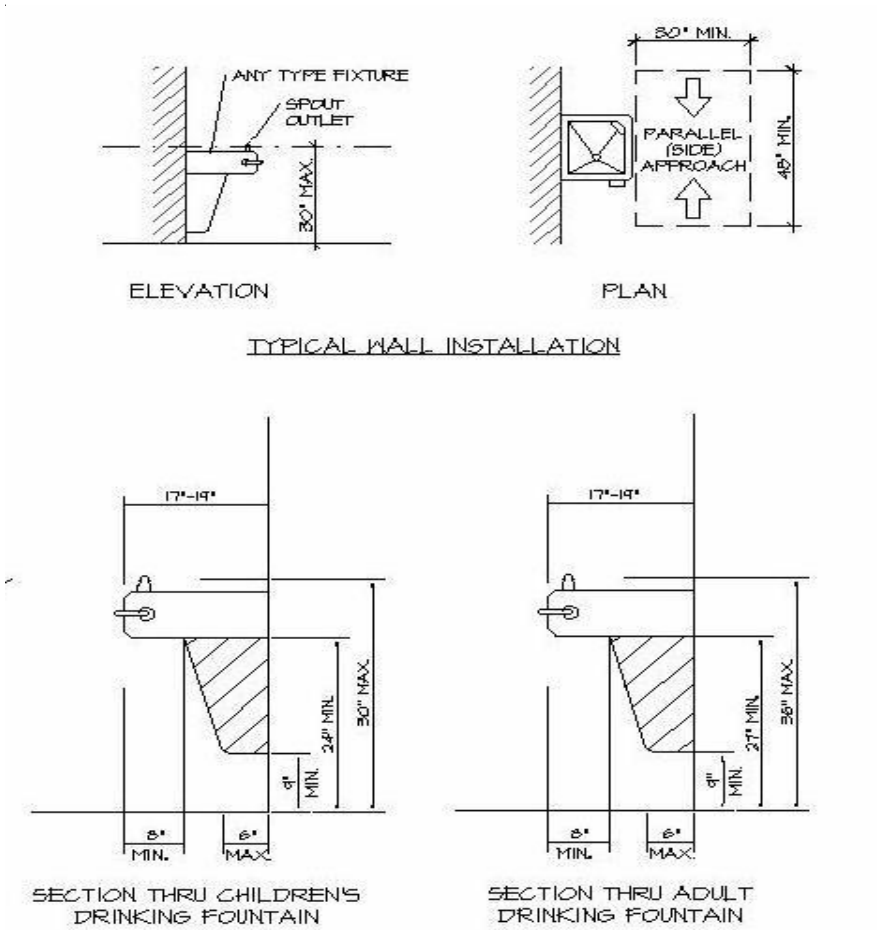

Water Closets

- Toilets shall be sized for the intended age per graphics on page F-4.
- A major disability issue that must be addressed is changing diapers for older children, 3 years +. The current solution is to lay the child on the floor in the classroom. The preferred solution is to provide adequate room for a cot or wall hung table in the bathroom. Generally the space required for wheelchair manuvering will suffice for diapering.
- Children's toilet: Provide one side and grab bar in the children's toilet area (at a minimum, provide one of each in an accessible location). Follow the most recent requirements established by ADAAG.
- Flush controls should be mounted 500 mm to 750 mm above the finished floor on the wide side of toilet areas.
- Toilet paper dispensers should be mounted 350 mm above the finished floor within children's reach.

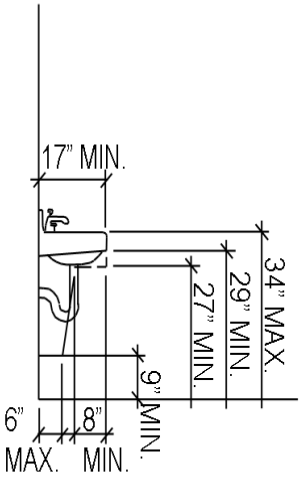

LAVATORY ELEVATION

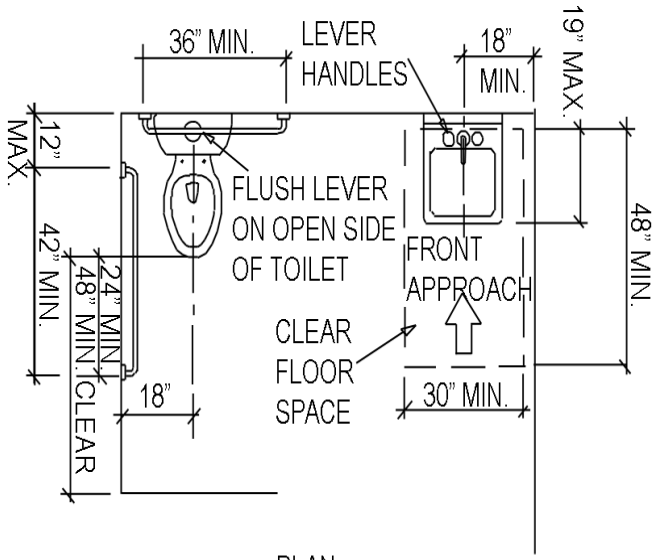

PLAN

SINGLE OCCUPANCY TOILET

FIXTURE LOCATIONS			
	AGES		
FIXTURE	3 AND 4	5 THRU 8	9 THRU 12
WATERCLOSET CENTERLINE FROM FINISHED WALL	120 INCHES (305 mm)	12-15 INCHES (305-380 mm)	15-18 INCHES (380-455 mm)
SEAT HEIGHT	11-12 INCHES (280-302 mm)	12-15 INCHES (305-380 mm)	15-17 INCHES (380-430 mm)
GRAB BAR MOUNTING HGT.	18-20 INCHES (455-510 mm)	20-25 INCHES (510-635 mm)	25-27 INCHES (635-685 mm)
TOILET TISSUE DISPENSER HEIGHT	14 INCHES (355 mm)	14-17 INCHES (355-430 mm)	17-19 INCHES (430-485 mm)

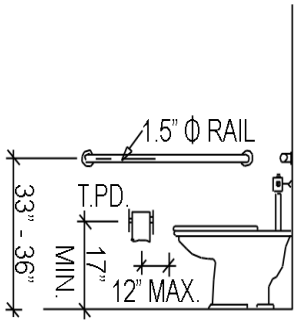

TOILET ELEVATION

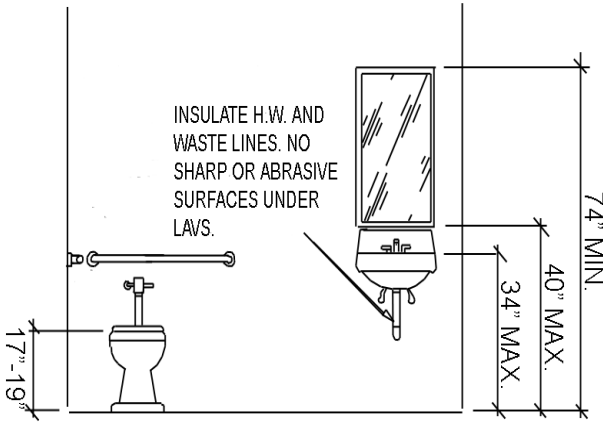

ELEVATION

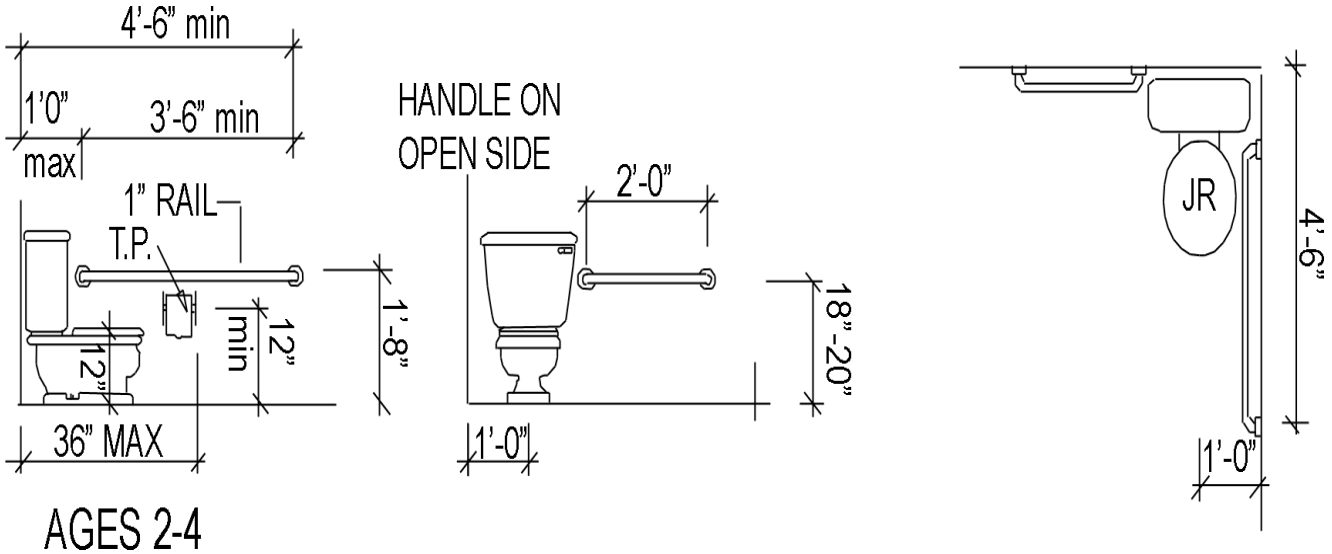

AGES 2-4

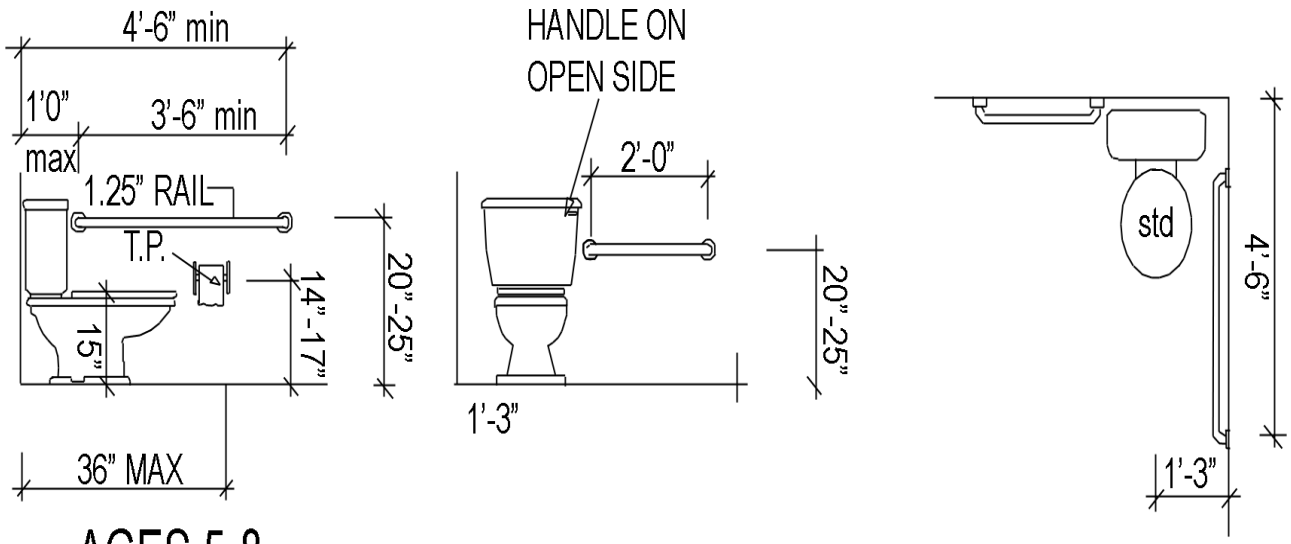

AGES 5-8

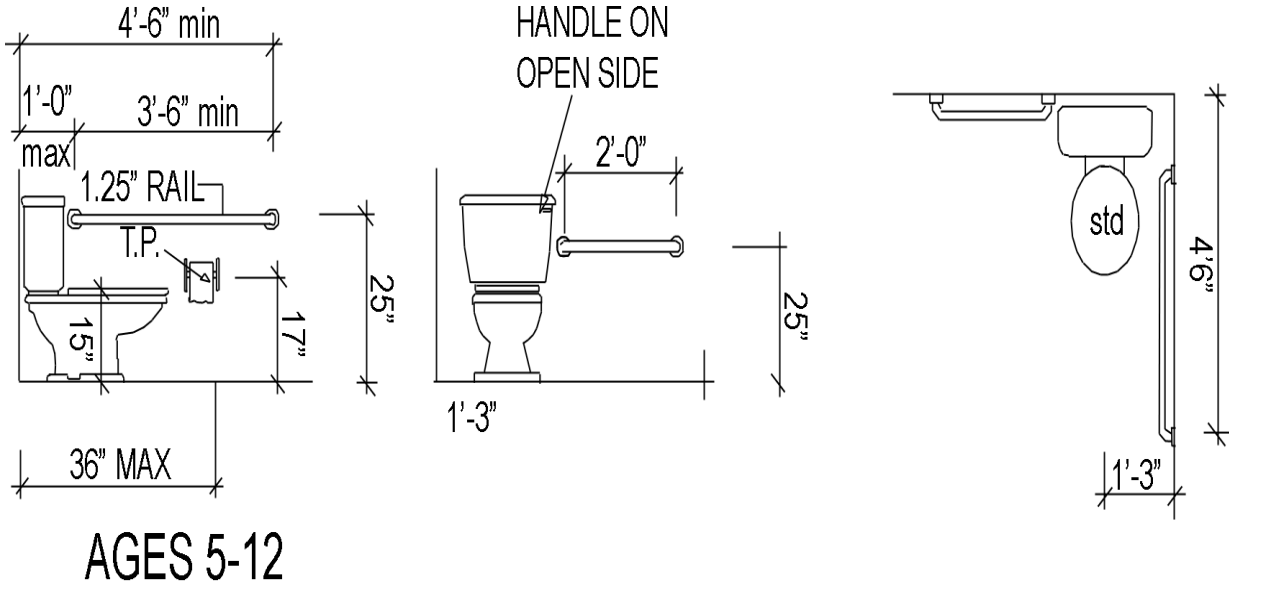

AGES 5-12

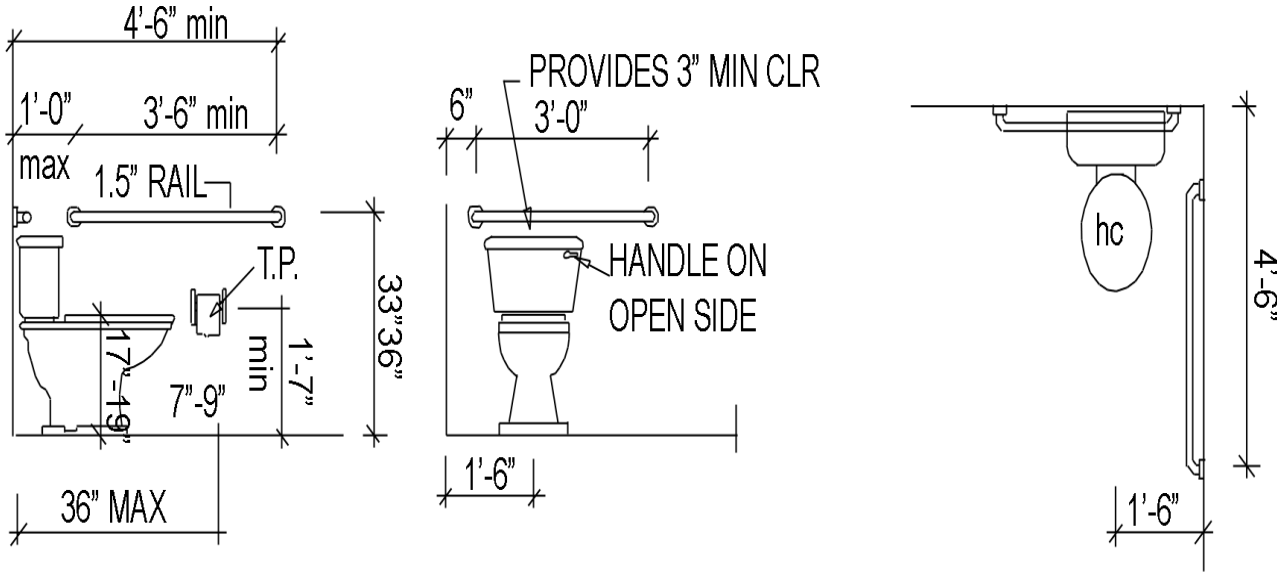

ADULT

Toilet Stalls

- Toilets and toileting are major issues in childcare centers. Children become "toilet trained" within a broad range of age, but at an average age of 2-1/2. Before this time they are diapered. Until the age of 5 or 6, toilets are an extension of the classroom, where children learn proper health habits. Therefore, properly designed centers have toilets directly accessible to the classroom, not gang toilets as used in elementary schools. The most pressing problem in childcare design is the application of the regulations to every toilet room. BOCA Code states that non-required bathrooms designed for children's use are not required to be accessible. Generally toilet rooms will be located between two classrooms. The graphic below shows a design solution that provides an accessible toilet and two non-accessible toilets.
- Another approach is to consider the toilet rooms as "stalls" with manuvering room located directly outside the toilet room door.
- If the tank height or the flush valve prevent the placement of a grab bar over a fixture, a 610 mm grab bar may be placed offset to the wide side as shown.

Urinals

- Typically not used in child care.

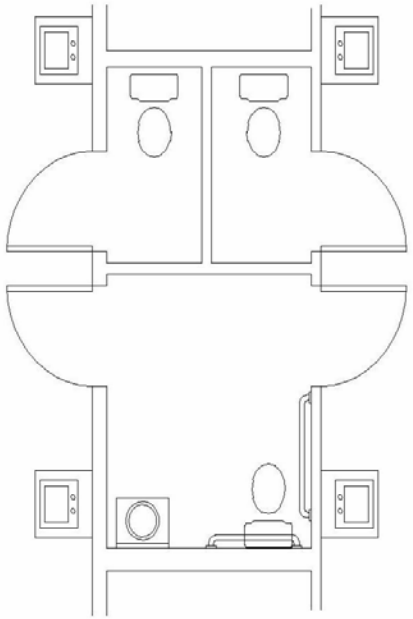

SHARED ACCESSIBLE TOILET
WITH PRIVATE INDIVIDUAL TOILETS

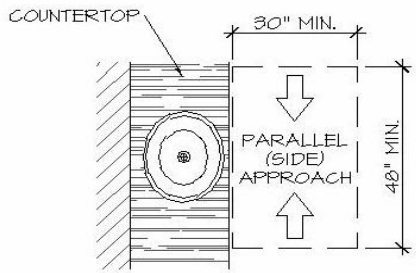

LAVATORIES AND SINKS

1. FOR LAVATORIES AND/OR SINKS SERVING CHILDREN 5 YEARS AND YOUNGER. IF A 30"Wx48"L MIN. CLEAR FLOOR SPACE ORIENTED FOR A PARALLEL APPROACH IS PROVIDED. THEN SPACE BELOW THE FIXTURE(S) MAY BE ENCLOSED.
2. PROVIDE A CLEARANCE OF AT LEAST 29" A.F.F. TO THE BOTTOM OF THE APRON. THE RIM SHALL BE NO HIGHER THAN 34" A.F.F. SINKS SHALL HAVE A MAX. DEPTH OF 6.5"
3. HOT WATER AND DRAIN PIPES UNDER THE LAVATORY SHALL BE INSULATED AND PROTECTED.
4. ALL FAUCETS SHALL BE LEVER TYPE.
5. MIRRORS SHALL BE MOUNTED WITH THE LOWER EDGE NO HIGHER THAN 40" A.F.F.

ACCESSIBLE LAVS AND SINKS

NOT TO SCALE

Lavatories and Mirrors

- Lavatories used by children ages 5 and younger are not required to have knee or apron clearance if a side parallel approach is provided.
- Lavatories used by children 6 thru 12 years of age shall have an apron and knee clearance of 610 mm, provided the rim or counter is no higher than 760 mm.
- Faucets on children's lavatories may be fitted with sanitary and energy conserving automatic controls, but the designer must ensure that these devices will be acceptable to local licensing before specifying them. Faucet controls mounted on the face or rim of counter surface should be no greater than 355 mm from the leading edge.
- Mirrors must be mounted over the sink with the bottom edge no higher than 750 mm above the finished floor. Provide one full-length mirror with the bottom edge a maximum of 450 mm above the finished floor. All mirrors are to be shatter-proof. See graphic below for mounting heights and sizes.
- Paper towel dispensers should be mounted beside or in close proximity to the sinks. No dispensers of any kind should have serrated edges if they are within children's reach.

Bathtubs

- Not Applicable.

Shower Stalls

- Not Applicable.

Toilet Rooms

- See applicable code sections.

Bathrooms, Bathing Facilities and Shower Rooms

- See applicable code sections.

Sinks

- Sinks used by children ages 5 and younger are not required to have knee or apron clearance if a side parallel approach is provided.
- Sinks used by children 6 thru 12 years of age shall have an apron and knee clearance of 610 mm provided the rim or counter is no higher than 760 mm.

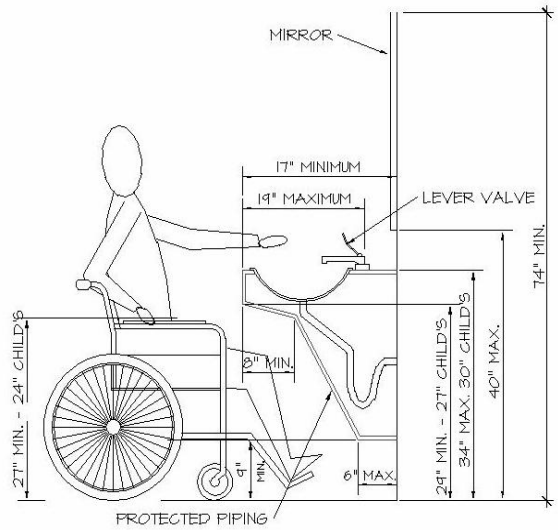

TRUEBRO OR EQUAL #101 AND #105
IF REQ'D VINYL INSULATION KIT - WHITE

ACCESSIBLE LAVATORIES AND SINKS

NOT TO SCALE

Storage

- Closets and storage areas should not be accessible to children.
- Built in or fixed storage accessible to children shall be located at 510 mm to 1120 mm above the finished floor.
- Clothes hanger rods, coat hooks, or shelves shall be located 915 mm to 1120 mm maximum above finished floor.

Handrails, Grab Bars, and Tub and Shower Seats

- See applicable code sections.

Controls and Operating Mechanisms

- Forward and side reach: Maximum high reach is 900 mm; minimum low reach is 500 mm.

Alarms
- Care must be taken to prevent audible signals greater than 90db to prevent hearing damage in young children.

Detectable Warnings
- No children's requirements.

Signage
- Children's signs shall be mounted 1015 mm maximum above the floor.

Telephones
- Not Applicable.

Fixed or Built-in Seating and Tables
- Fixed or built-in seating or tables used primarily by children ages 5 and under and not required to be accessible if parallel side approach is provided.
- Tops of accessible counters and tables shall be 660 mm to 760 mm above the floor.
- If knee space is required, it shall be at least 610 mm hight, 760 mm wide, and 485 mm deep. Clear floor space must also be provided.

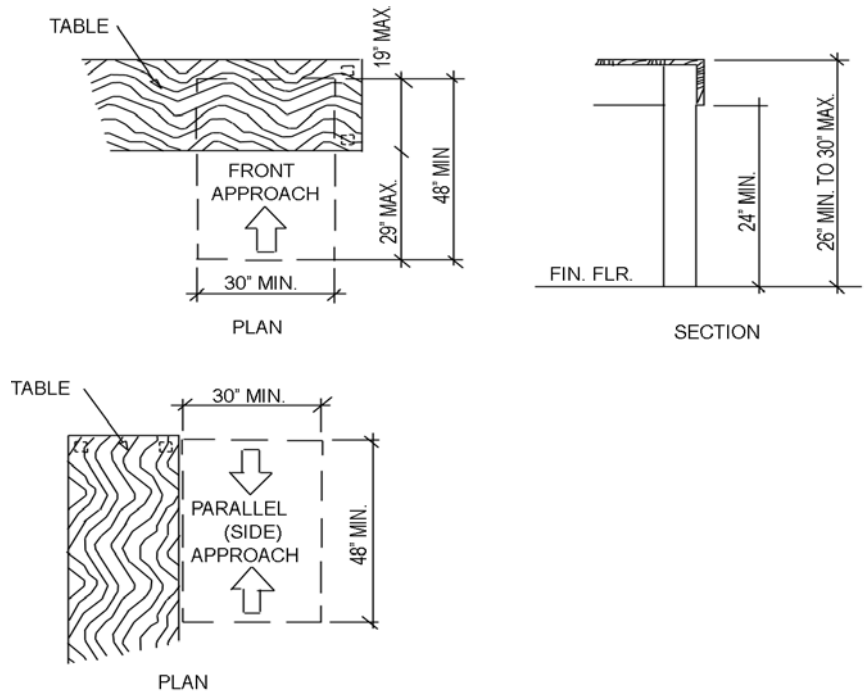

SEATING AND TABLES

NOT TO SCALE

SERVING AGES 6 TO 12

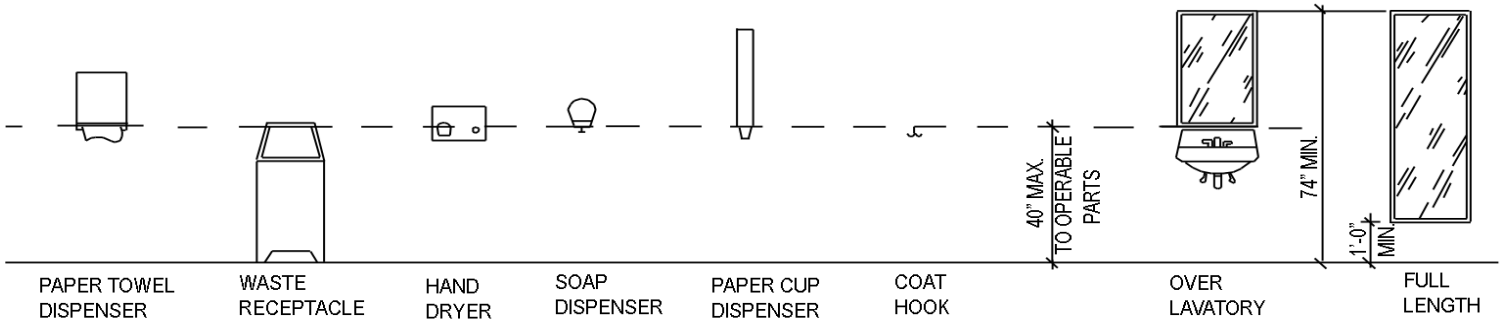

ACCESSORIES MOUNTING HEIGHTS

NOT TO SCALE

APPENDIX G

Playground Solicitation Requirements

Legislation, Executive Order number 13101, and GSA Order mandate buying products that reduce environmental impact. The Environmental Protection Agency (EPA) has developed a list of designated products, commonly referred to as the CPG (Comprehensive Procurement Guidelines). The CPG items are those which Federal agencies are required to purchase. EPA has established specified amounts of post-consumer materials required as the recycled content for each designated item. To date, EPA has grouped a total of 54 CPG items into 8 product categories. Two specific product categories (Park and Recreation Equipment and Playground Surfacing) apply to the development of GSA play yards.

As the first step in a play yard plan, the coordinator and designer must consider what size and type of equipment is optimal for the specific project. At this point, it is necessary to consider CPG requirements for recycled content materials as identified under "Park and Recreation Equipment." This general heading includes requirements for park benches & picnic tables, playground equipment, playground surfaces, and plastic fencing. www.epa.gov/cpg

If metal structures are specified, such as Little Tikes, Commercial, etc., identify vendors on GSA schedule who offer that kind of product. The vendor's proposal must include the proportion of recycled material that is in the product. The standard is:

— Steel [4] 16% (postconsumer) /25–30% (total) 67% (postconsumer)
— Aluminum 25% (postconsumer) /25% (total)
— Plastic [3] 90–100% (postconsumer)/100% (total)
— Plastic Composites 50–75% (postconsumer)/95–100% (total)

If you decide on composite plastic-type structures (such as Grounds for Play – Trex, etc.), then you would need to check into vendors that offer this kind of product. The vendor's proposal must include the proportion of recycled material in the product. The standard is:

— Plastic [3] 90–100% (postconsumer)/100% (total)
— Plastic Composites 50–75% (postconsumer)/95–100% (total)

Avoid wood playground equipment and landscaping elements, as per the Design Guide (P100). There are better alternatives that do not have the problems of wood on play yards. Exceptions include *marine* plywood such as the kind used in many of the Kompan-type pieces, as well as engineered wood fiber impact resistance surfacing. Then you would check into vendors that offer this kind of product and request as part of their proposal the amount of recycled material that is used as part of the structures. The standard is:

— Structural Fiberboard Recovered Materials - 80-100%
— Laminated Paperboard Postconsumer Paper - 100%

You may or may not be seeking proposals for the fall zone surfaces as part of the same scope of work. Regardless of your approach to this purchase, you must first consider what type of fall zone material is most appropriate for the specific application. If you decide to go with a rubber mat, poured in place rubber surface or rubber pieces, recycled material must be used. The standard is:

— Plastic or Rubber 90–100% (postconsumer)

If you decide to go with an engineered wood fiber (fibar) the standard is:

— Wood/Paper 100% (total)

Ask for proposals from 3 scheduled vendors. Vendors with a CPG designation are pre-qualified as meeting the standard. For vendors without the CPG designation you must request that they provide to you on letterhead or other commonly available company literature/website the amount of recycled material in the playground components that are part of your request. http://www.epa.gov/cpg/avail.pdf/parkrec.pdf

COMMENTS ON ABOVE PARAGRAPH: The above paragraph may be a little misleading when using the term pre-qualified. These vendors on the EPA web-site **may or may not be** on GSA schedule.

Suggested Language: Items **must** be purchased through our Federal Supply System, if available. This includes stock items or items and services on contract. The easiest way to comply with the GSA APP is to order *Comprehensive Procurement Guideline (CPG)* items online through ***GSAAdvantage!*** http://www.gsaadvantage.gov and look for ***the CPG icon. NOTE*:** This is **not** a complete list of vendors who meet the CPG requirements as some of the vendors may not have updated their product information. If a vendor on this web-site is used, you must request that they provide to you on letterhead or other commonly available company literature/website the amount of recycled material in the playground components that are part of your request. Another source for locating products is through http://www.epa.gov/cpg/avail.pdf/parkrec.pdf.

In addition to the typical requirements in the scope of work for layout, developmentally appropriate structures, sand and water play, trike paths, dramatic play areas, etc. the scope must include the following sentence: "**Provide with your design and cost proposal a statement on letterhead or provide other commonly available company materials that specify the amount of recycled materials in your products."** Ensure that all play yard designs meet Design Guide (P100) requirements, ADA requirements, and CPSC guidelines.

If you specify, order, or purchase a *CPG* item **without** the required minimum recovered materials content, you **must** submit a written justification. Regional requirements vary along with whom the justification is submitted to. Your regional Environmental Coordinator, Recycling Coordinator or Acquisition Management Officer can provide you with your Regional requirements. **Definitions and explanations of applicable recycled materials refer to:** www.epa.gov/cpg

Exceptions:

Under limited circumstances, you may justify not purchasing *CPG* designated items with the minimum recovered materials content based on one of the following reasons:

1) The item is not available competitively within a reasonable timeframe.

2) The item does not meet appropriate performance standards.

3) The item is only available at an unreasonable price.

If a CPG item is not available, then the product with the best environmental qualities should be used.

Index

A

Access point 6-4
Accessibility 10-5
Acoustical ceiling tile 9-3
Acoustical treatment 4-2
Acoustics 10-6
Activity Area for Infants 7-11
Activity Area For Pre-Schoolers 7-12
Activity Area For Toddler 7-12
ADA 1-2 , 2-2 , 7-5
Administration 4-2
Administrators 3-2
Adult Spaces 5-5
Adult toilet 7-5
Advisory Council on Historic Preservation 10-6
After-school program 3-6
Age group 3-3
Age Mixing 4-4
Age Separation 4-4
Agricultural Extension Service 6-8
Air Conditioning 10-8
Annual user charge 2-4
Approach zone 6-9
Architects 1-1
Architectural Form 7-8
Art 7-11
Art Sink 7-1 , 7-14
Artificial turf 6-10
ASF 1-3 , 7-3
Assistant or secretary 7-1 , 7-4
ASTM 1-3 , 8-1

B

Backpack 3-5
Baffles 10-6
Balancing equipment 8-3
Ballards 6-7
Banners 10-6
Barriers 6-3
Baseline 2-4 , 7-19 , 8-3
Baseline standard 1-1
Bench 8-3
Berms 6-3
Blinds 10-8 , 10-10
Block building 7-11
Blood-borne pathogen 7-15
Boards of directors 2-3
Building Manager 1-1 , 2-3
Bulletin board 3-1 , 4-1 , 7-2 , 7-10

C

Capacity 1-3
Carpet 9-3 , 10-6
Ceilings 9-3
Ceilings heights 7-8
Center Management 2-3
Central resource storage 7-1
Ceramic mosaic tile 9-3
Ceramic tile 9-2
Chair 8-1
Chalkboards 7-14
Changing table 7-15
Chemicals 8-2
Child Accessible Display 7-18
Child care facility 1-4
Children with disabilities 6-6
Child’s viewing perspective 7-11
Circulation pathway 6-4
Classroom 1-4 , 1-5 , 5-4 , 7-1
Classroom Entrance 7-10
Classroom Size 7-7

Cleanouts 10-8
Closed circuit TV camera 10-12
Colors 9-1
Common Area 7-1
Conference Room 8-9
Consumer Product Safety Commission 6-3 , 6-8 , 6-9 , 7-13 , 8-2 , 9-2
Copier 7-4
Cords 10-8
Corners 7-9 , 7-11
Cot 3-5 , 3-6 , 7-17 , 7-18
Countertops 8-2
CPSC 1-2
Crawl-through structures 8-3
Crib 3-5 , 8-1
Cruising 3-5
Cubby 3-1 , 3-3 , 3-5 , 7-1 , 7-10
Curriculum 4-1

D

Developmentally appropriate activities 3-4 , 6-3 , 7-1
Diaper 3-2
Diaper changing table 3-3
Diapering areas 4-2
Diapering Station 7-1 , 7-15
Dining 3-4
Directors 3-2
Director's Office 4-2 , 7-1 , 7-4
Display space 7-9
Display surface 9-2
Display walls 7-14
Doors 10-8
Draperies 10-8
Drinking fountain 7-18 , 10-8 , F-6
Dry marker boards 7-14
Ductwork 10-6

E

Eating/Table Area 7-17
Electrical 7-21 , 10-12
Electrical outlet 10-6
Electrical outlets 7-11
Electrically switched door 10-12
Engineers 1-1
Enrollment Capacity 5-1 , 5-5
Entrance 6-1 , 7-1
Entry and Circulation 3-1 , 6-1 , 7-1
Entry/Lobby 8-9
Evacuation crib 7-16 , 8-1
Exhaust 10-9
Exhaust ventilation 7-15 , 7-16
Exposing structural ceiling 9-4
Exterior Noise 10-6

F

Fall zone 6-9
Federal employee services 5-4
Fence 6-3
Finishes 2-4
Fire alarm 2-4
Fire detection 2-4
Fire suppression 2-4
Floor drain 7-12 , 7-14 , 7-15 , 7-19 , 7-20 , 10-8
Floor Finishes 9-3
Floor levels 7-8
Fluid applied flooring 9-3
Food Preparation 7-1 , 7-17
FPMR 101-17 1-2
Full-day school program 3-6
Furniture and Equipment List 8-3

G

Gate 6-8 , 8-1
Glass 10-7
Glazing 10-6
Goals and Objectives 2-1
Grab bar 7-12
Group Size 4-3 , 4-4

GSA 1-1 , 1-4 , 8-3 , 10-6
GSA managed space 2-1
GSA security risk analysis 5-4
GSA-controlled space 3-2
GSA-owned or controlled space 1-1 , 2-4
Guardrail 6-8 , 7-13

H

Handrail 6-8 , 7-14
Hardware 10-8
Headroom 6-9
Health and Safety 4-2
Heating units 10-10
High security risk area 6-3
Historic Building 1-2 , 2-2 , 5-4 , 10-6
Historic Preservation Officer 10-5
Hooks 7-12
Horizontal window mullions 10-7
Hot water temperature 10-15
Humidity Level 10-9

I

Infant Classroom 7-6
Infant Cubbies 7-10
Infant Lofts & Platforms 7-13
Interagency Task Force on Federal Child Care 2-3
Intercom system 10-12
Interior Noise 10-6
Interior space per child 5-2

J

Janitor 3-2 , 7-1 , 7-19 , 7-20
Janitor's Closet 7-20

K

Kitchen 7-19 , 8-9

L

Laminating and copy machines 7-5
Landmark 6-1 , 6-4
Large motor activity 7-11
Large Motor Play 6-5
Laundry 10-2 , 7-1 , 7-19 , 7-20
Lead 10-4
Lighting 6-1 , 10-10
Loft 3-5 , 7-1 , 7-12 , 7-13 , 8-3
Lounge 4-2 , 7-5
Luminous ceilings 9-4

M

Mail box 7-10
Main building and service entrance 6-1
Main building central plant 7-21
Main building dock 6-2
Main building entrance 5-4
Main Circulation 7-1 , 7-2
Main entrance 5-4
Main entry 7-1
Maintenance 3-2
Manipulatives 7-11
Material 6-1
Math 7-11
Microclimate 5-4
Millwork 2-4
Mirror 7-12 , 7-15 , 9-2
Mixed-Age Grouping 1-4
Mud room 7-2
Multi-passenger stroller 3-4 , 3-5
Multiple purpose space 7-1 , 7-18
Music 7-11

N

NAEYC 1-2 , 2-3 , 4-1 , 8-1
Napping/sleeping areas 10-8
National Register of Historical Places 10-5 , 10-6

Natural light 5-3 , 7-9 , 7-11
Nature study 7-11
Nests 7-12
Noise sources 5-3
Nursing 3-1 , 3-3 , 7-1 , 7-17
Nutrition and Food Service 4-2

O

OCCDP 9-6
Office 8-9
Older Toddler and Pre-school Cubbies 7-10
Older Toddler Classroom 8-5
Open Activity Area 7-11
Organization of the Guide 1-2 , 1-3
OSF 5-1 , 7-3
Other Applicable Documents 1-2
Outdoor Play Yard 8-10

P

PAC 2-4
Paper towel 10-8
Parent 4-1
Parent/Teacher Conference Area 7-1 , 7-4
Parents 3-1
Parking 6-1
Partitions 7-7
PDS 1-2
Personal computer 7-4
Platform 6-8
Play activities 7-11
Play Equipment 8-2
Play superstructure 6-7
Play Yard 3-4 , 3-5 , 6-1 , 6-3 , 7-1
Play yard space 5-2
Playhouses 8-3
Plumbing fixtures 7-9
Poisonous plant 5-4 , 6-8
Porch 6-1 , 6-4 , 6-9 , 7-2
Pre-school 1-4 , 3-3
Pre-School Classroom 7-6
Pre-schooler 3-5
Private toileting facilities 3-6
Program 1-3
Props 6-4
Protective barrier 6-9 , 7-13
Public transportation 5-4

R

Radon 1-2
Reading/listening 7-11
Reception 3-1 , 7-2
Reception area 7-1 , 7-2 , 10-5
Regional Child Care Coordinator 1-1 , 2-3 , 8-3
Resilient surface 6-6 , 6-9
Role playing 6-5
Rooftop equipment 7-21
Rugs 9-3

S

Sand and water play 7-11 , 7-12
Sand and water table 6-5 , 8-3
Satchel 3-5
Scale 3-4 , 3-5 , 7-11
School-Age 1-5 , 3-3 , 3-6
School-Age Classroom 7-7
School-Age Lockers 7-10
Science 7-11
Sealed concrete 9-3
Seating 8-2
Secure perimeter 5-4
Security 5-4
Security alarm 10-12
Security device 7-2
Separation of Spaces 7-7
Service access 6-2
Service area 7-19
Service dock/entrance 7-1
Service Entrance 7-20

Service entry 5-4
Service Personnel 3-2
Service Space 7-1
Shades 10-8 , 10-10
Shading 6-9
Sheet vinyl 9-3
Shut-off valve 10-8
Sick Bay 5-5 , 7-1 , 7-19
Signage 6-1
Sill height 10-7
Sleeping and Napping Areas 7-17
Slides 8-3
Slope F-5
Slotted fee box 7-2
Soap dispenser 10-8
Socio-dramatic 7-11
Staff 2-3 , 4-1
Staff Areas 7-1
Staff lounge 7-1
Staff Qualifications and Development 4-1
Stair 7-14
Standards 2-2
Storage 7-5 , 7-11 , 8-1
Stroller 8-1
Summer program 8-2

T

Tables and Chairs 8-2
Teacher Lounge/ Resource Room 8-10
Teacher Storage 7-1 , 7-18
Telephone 7-4 , 7-19 , 7-21
Temperature 10-9
Texture 9-2
Three Year Old Classroom 8-7
Tire chips 6-9
Tire swings 8-3
Toddler 1-5 , 3-5
Toddler & Pre-School Lofts & Platforms 7-13
Toilet seat height 7-15
Toilet training 3-3 , 3-5
Toileting and hand washing 7-1
Transfer of Noise 10-6
Transition 6-1
Transition area 7-1 , 7-2
Trees 5-4
Tuition drop box 7-10

U

UFAS 1-2 , 2-2 , 7-5 , 10-8
Umbrella strollers 7-10
United States Code 40, Section 490b 2-3
Unrestricted space per child 5-2
Upholstered Furniture 8-2
Utility Room 8-9

V

Valances 10-8
Ventilation 10-9
Vestibule 7-1 , 7-2
Video equipment 7-4
Video monitor 7-4
Views 5-4
Vinyl wallcovering 9-2

W

Walk-off mat 7-2
Wall configurations 7-8
Wall Finishes 9-2
Waste 10-8
Wheeled toy 6-4 , 8-3
Windows 10-7
Wood chips 6-9
Woodworking 7-11
Workroom 7-5

GSA Public Buildings Service
Office Of Child Care
26 Federal Plaza, Room 2-128
New York, NY 10278
212.264.8321
www.gsa.gov/childcare