Case Study

Achieving Results with Renewable Energy in the Federal Government

Solar is Saving Energy for the Alfred A. Arraj U.S. Courthouse

Among its many distinctions, the new Alfred A. Arraj Courthouse in Denver, Colorado, is the first federal courthouse to build solar electricity into its structure. To demonstrate its commitment to safeguarding the environment, the General Services Administration (GSA) decided to include a building-integrated photovoltaic (BIPV) system in this comprehensive sustainable design and construction project. The courthouse PV system is one example of only a few BIPV systems installed at federal facilities around the country. BIPV systems not only produce electricity, they also serve as an integral component of the building envelope, replacing roofing or façade materials. This project allowed the GSA to gain first-hand experience with these more complicated yet architecturally integrated systems.

The BIPV system is one of many measures incorporated into the building to reduce its energy usage by 46% compared to a typical courthouse. Although the Arraj Courthouse PV system was designed primarily to showcase this technology, the system also produces up to 60 kWh of electricity daily to help supply power for the building's mechanical equipment. The system is connected to the building electrical distribution system and saves the courthouse an average of $61 per month in electrical utility costs. Because of conventional electricity production inefficiencies and distribution losses, this PV system, like all distributed generation systems, saves three times more energy at the source of the central utility power plant. Another benefit is that the PV system produces electricity without emitting carbon dioxide or other greenhouses gases into Denver's air. This 11.5-kW PV system is thus an environmentally sound means of supplying a portion of the building's electrical needs.

The GSA served as the project developer and worked with the project design team, the PV supplier, and the Department of Energy (DOE) Federal Energy Management Program (FEMP) to design and monitor the system. The building design process emphasized the efficient use of energy by reducing the heating, cooling, ventilating, and lighting loads typical of a conventional courthouse building.

The solar system includes 1,491 ft^2 of PV panels. Monocrystalline PV cells in glass-on-glass panels are integrated as architectural shading elements on the southeastern side of the roof. The PV system is tied directly to the building's three-phase electrical system with inverters. Grid-connected solar electric systems can be cost effective for facilities with high electricity rates, especially in the summer, when high peak demand becomes costly during daytime operating hours.

©David A. Martinez, PIX14002

PIX13998

PIX13999

Building-integrated PV is located along the roof of the building. The PV cells are sandwiched in translucent glass panels and mounted horizontally to form seven shaded bays at the penthouse level.

Highlights

System capacity	11.5 kW_{dc} rated at standard test conditions, 8.1 kW_{ac} peak power measured as installed
Power production	30 kWh/day on average of delivered electricity (up to 60 kWh/day), offsetting an average 910 kWh/month to meet 0.33% of annual electricity consumption and 0.2-1.0% of monthly peak electrical demand
Installation date	2002 (building dedicated October 16, 2002)
Motivation	To showcase the energy and environmental features of the new courthouse with its sustainable building design
Size	126 panels
Annual savings	$728/year average in electricity costs

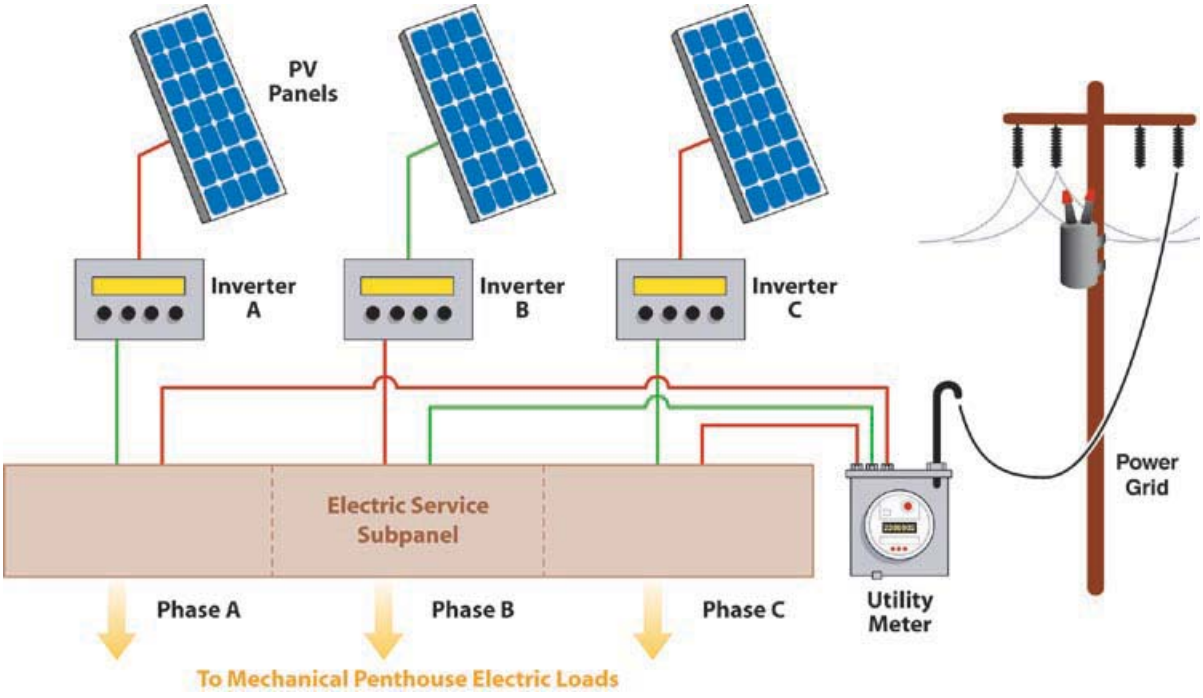

The PV array feeds DC power to three inverters, which in turn provide utility-grade AC power for use in the building.

System Details

Components	Shell/Siemens monocrystalline silicon solar cells that total 1,491 ft^2 (139 m^2) of panels and 1,181 ft^2 (110 m^2) of solar cell area; three Xantrex/Trace SW5548PV inverters each supply one phase of electrical power
Storage	None (system is grid-connected and there are no batteries)
Loads	System provides electricity through a penthouse mechanical-room electrical subpanel
Supplier/installer	System designed by Altair Energy, supplied by Atlantis Energy Systems, and installed by A-1 Glass and Berg Electric
Monitoring	A datalogger records five parameters: collector-plane global solar radiation, wind speed, outdoor dry-bulb temperature, total AC power delivered by the system, and voltage of one array
Expected life	30 years for PV panels, 10 years for inverters

How the Technology Works

Solar PV cells convert solar energy to direct-current (DC) electricity. PV cells are made of semi-conducting materials wired together in modules. PV modules are grouped together to form panels, and panels are connected to form an entire PV array. Inverters convert DC electricity to alternating current (AC). PV systems provide the most energy in sunny climates and can be even more cost effective in locations that are not served by a utility line. Batteries, battery-charge controllers, and hybrid back-up power may be needed to supplement the PV power in these remote locations. PV can also be used to directly power stand-alone devices, such as outdoor lighting, water pumping, and communications equipment. The energy output of PV systems is optimized when the panels are tilted toward the sun.

Performance

The solar electric system has run routinely since May 2003. Under peak conditions with the installed configuration, the solar system delivers up to 8.1 kW of electricity. On a temperate sunny day, the system delivers up to 60 kWh of electricity and up to 1% of the building's peak electrical demand.

The system delivers an overall average of 910 kWh of electricity per month, which offsets an estimated $61 of energy costs. The month in which energy savings are highest, July, coincides with the best solar resource during the year (the greatest number of clear sunny days). The month in which energy savings are lowest, December, reflects the shorter days of winter and reduced solar resource. The maximum peak power production occurred during April, as shown on the graph of monthly power production.

The PV system performance is somewhat reduced during the winter months as shown in the graph of power production on February 14. This is primarily because neighboring high-rise buildings shade the PV panels in the afternoon at lower winter sun angles.

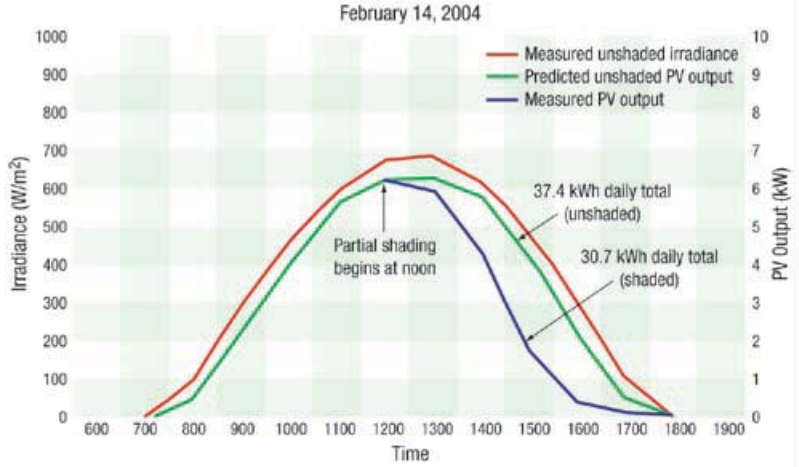

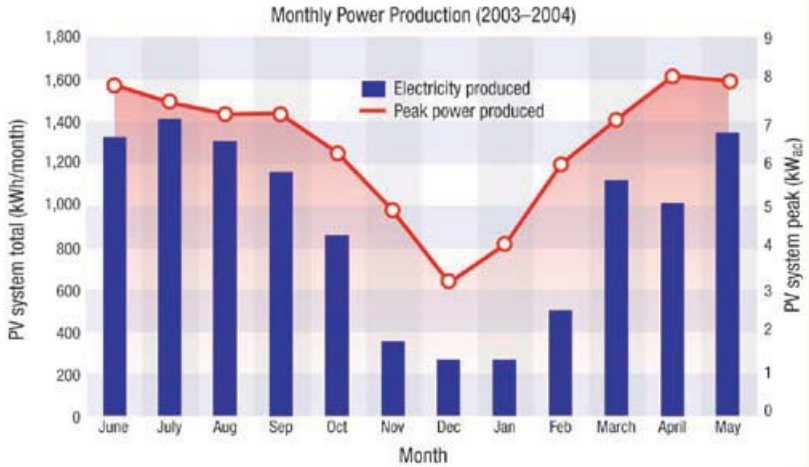

The solar panels are mounted horizontally at the penthouse level to visually integrate with the architectural façade. To optimize operational efficiency, the horizontally mounted collectors are cleaned every 3 to 6 months, depending on weather conditions.

Because calculating the electricity rate is complex and variable, an average blended rate for electricity consumption and demand is used here to estimate the utility bill savings ($0.067/kWh). Total annual energy cost savings average $728, and GSA's utility bills are reduced by that amount each year.

Note that the cost of PV systems is decreasing with technology innovations and manufacturing efficiencies. The cost can be further reduced when these systems are directly integrated into or displace other building systems, such as window or skylight glazing and roof or façade components.

Costs

Cost Breakdown for Arraj Courthouse PV System	
Initial System Cost (materials only)	$120,000
Per Unit Cost	$80/ft^2 $10,435/kW
Equivalent Electricity Rate	$0.47/kWh

Project Partners and Funding Sources

The cost of materials and installation for the PV system was part of the overall building construction budget of $85 million. FEMP provided assistance with the whole-building design and made specific recommendations for PV-system structural and electrical design. The original PV-system design was reduced as part of a value-engineering process.

FEMP continues to support the project by commissioning and monitoring the PV system's performance. The building design team included Anderson Mason Dale Architects, HOK, and RMH Group. The PV system was designed by Altair Energy, supplied by Atlantis Energy Systems, and installed by A-1 Glass and Berg Electric.

O&M and Emissions Benefits

Operational benefits include reducing electricity peak demand by as much as 8.1 kW and extending the life of the roof by shading it from the sun. Avoided emissions, based on Environmental Protection Agency eGRID 2000 factors for Colorado, amount to 11 tons/yr of CO_2, 56 lb/yr of SO_2, and 46 lb/yr of NO_x.

Applications at Other Government Sites

- **National Park Service and Thoreau Center Partners**, San Francisco, California – 1.25-kW_{dc} PV integrated as skylights and grid-connected. Installed in 1996 as part of building renovation.
- **New York City Department of Sanitation**, Rikers Island, New York – 40-kW_{dc} PV integrated as roof. Installed in 1996 and facility grid-connected in 1998.
- **U.S. Naval Air Station North Island**, Naval Base Coronado, California – 750-kW_{dc} PV integrated as parking shade structure. Installed in 2002.
- **General Services Administration, Federal Courthouse**, Los Angeles, California — 20,000 ft^2 of wall. New building PV-panel curtain design, estimated construction completion in 2010.

Public Outreach and Awards

- Colorado Renewable Energy Society Awards, 2000, Institutional Building Category
- 2001 GSA Environmental Awards, Model Facility Demonstrations, Non-hazardous Category
- "Innovators & Award Winners," Engineering News-Record, December 23, 2002, http://enr.construction.com/resources/special/archives/innovators_2002.asp#GSA
- U.S. Green Building Council LEED v1.0 Pilot Project

Contacts

John Leatherman, Real Property Management Specialist
General Services Administration
303-844-7940
john.leatherman@gsa.gov
www.gsa.gov

Alfred A. Arraj United States Courthouse
www.rmrpbs.gsa.gov

Joe Morrissey, Vice President
Atlantis Energy Systems, Inc.
916-438-2930
jomo13@atlantisenergy.com
www.atlantisenergy.org

Anne Sprunt Crawley, Technology Manager
U.S. Department of Energy, FEMP
202-586-1505
anne.crawley@ee.doe.gov

EERE Information Center
877-EERE-INF(O) or 877-337-3463
Internet: www.eere.energy.gov/femp

A Strong Energy Portfolio for a Strong America

Energy efficiency and clean, renewable energy will mean a stronger economy, a cleaner environment, and greater energy independence for America. Working with a wide array of state, community, industry, and university partners, the U.S. Department of Energy's Office of Energy Efficiency and Renewable Energy invests in a diverse portfolio of energy technologies.

Leading by example, saving energy and taxpayer dollars in federal facilities

Produced by the
National Renewable Energy Laboratory,
a DOE National Laboratory

DOE/GO-102005-2033
September 2005